P−16639−1
S5223

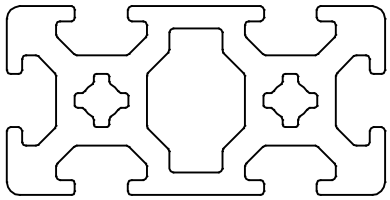

1:1

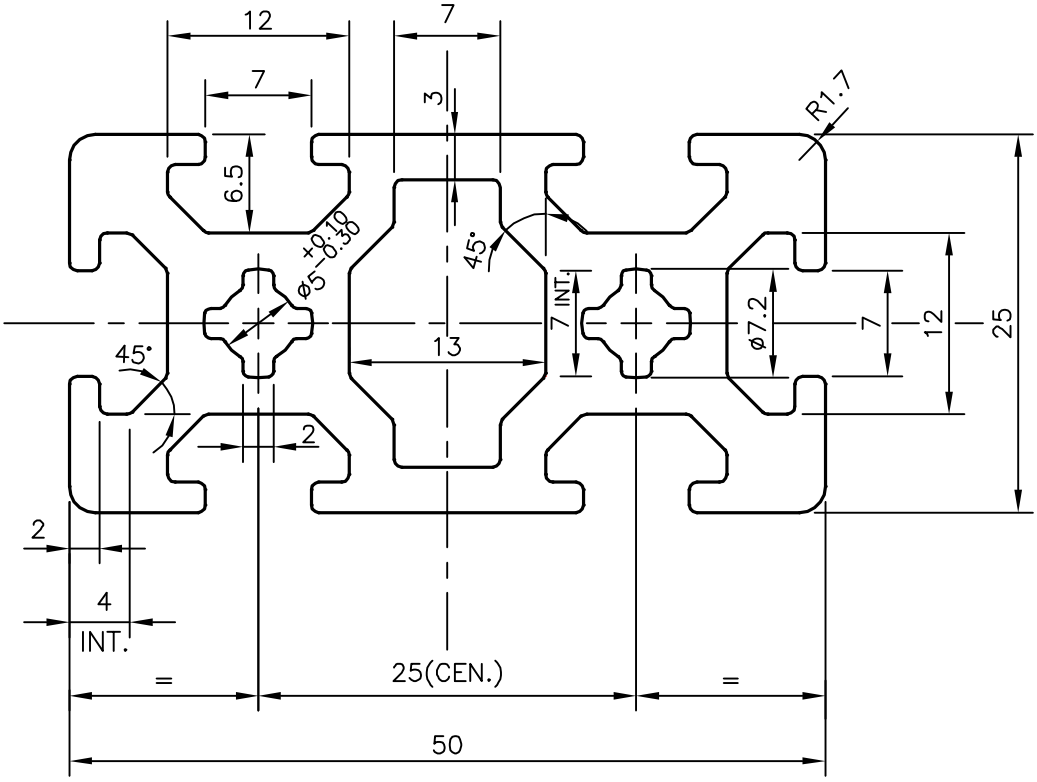

JINDAL SYMBOL OF QUALITY AN ISO 9001 COMPANY	*JINDAL ALUMINIUM LTD.* *BANGALORE−560073 (INDIA)*		NAME	DATE
		DRAWN	J.P.KAUSHIK	27−12−2016
		CHECKED		
		APPROVED	B.NATARAJ	29−12−2016
1. ALL DIMENSIONS ARE IN mm. 2. ROUND OFF ALL SHARP CORNERS WITH 0.50 mm. 3. TOLERANCES WILL BE AS PER IS:6477−1983 UNLESS OTHERWISE SPECIFIED		SCALE		2:1
		AREA mm^2		626.666
		PERIMETER mm.		259.266
PARTY'S NAME	VEER−O−METALS PVT. LTD., BANGALORE	WEIGHT kg/m		1.692
		DRAWING No.		SECTION No.
PARTY'S DRAWING No.	AS PER DRAWING	P−16639−1		−
ALLOY & TEMPER	6063 T5	S5223		S5223
DESCRIPTION	DISPLAY SECTION			