P-17153

S5410

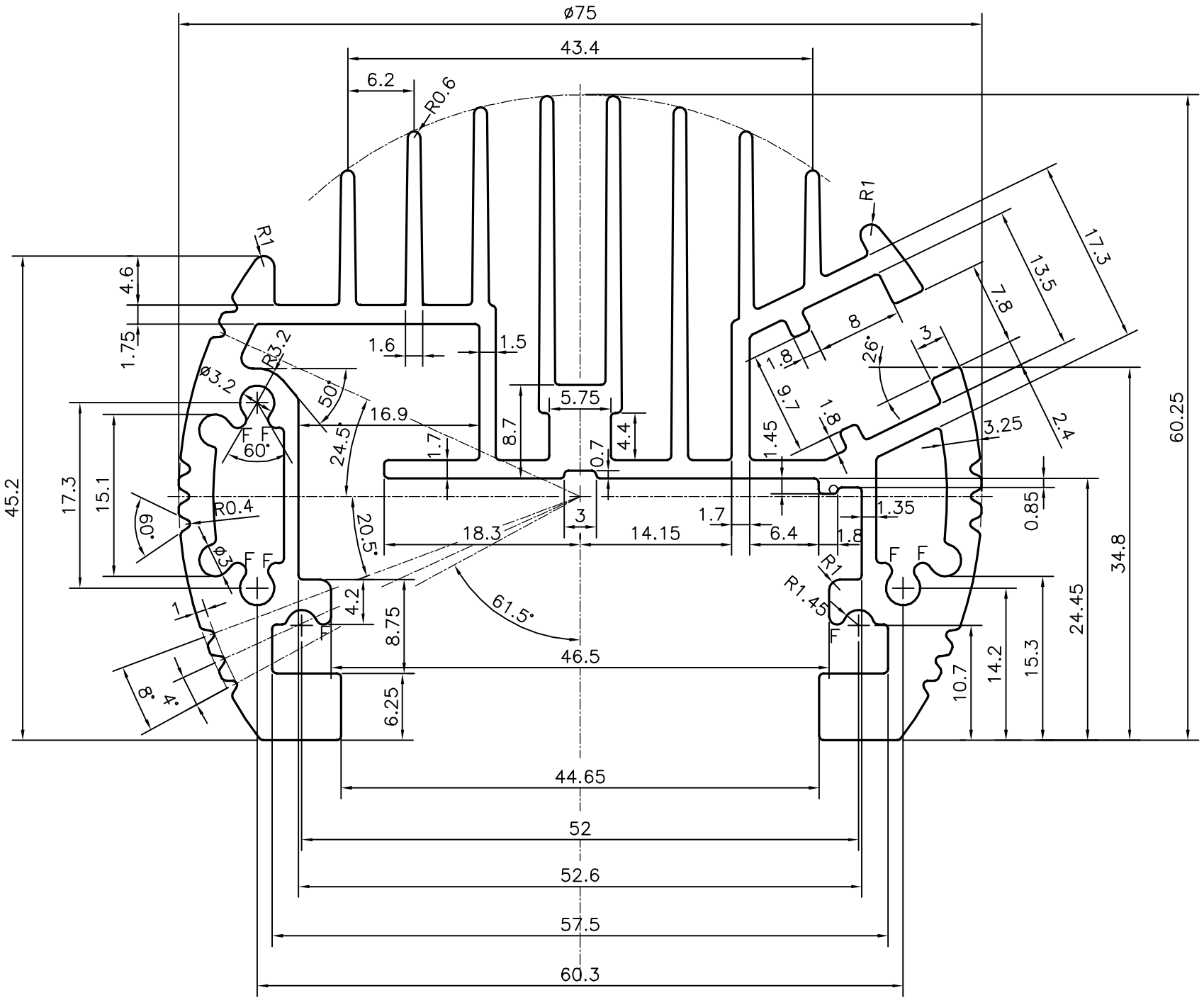

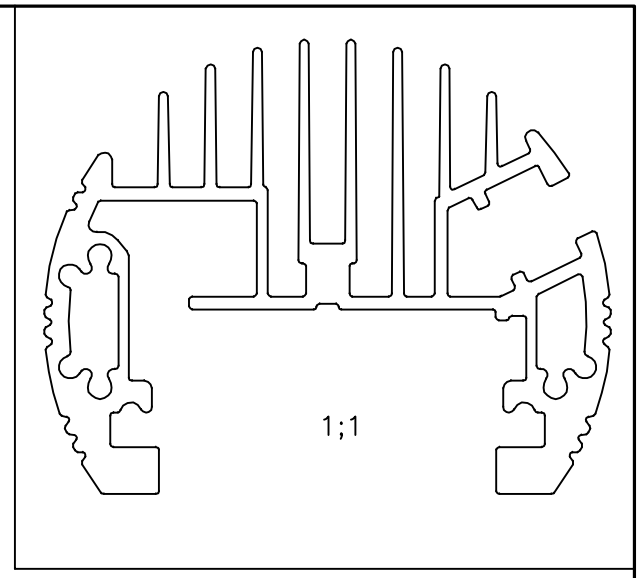

F = FULL RADIUS (6 PLACES)

PLEASE CONFIRM ALL THE DIMENSIONS AND MATCH WITH YOUR MATCHING COMPONENT

PLEASE SPECIFY THE EXPOSED SURFACE IN THE DRAWING WHEREVER BETTER FINISH REQUIRED.

TOLERANCES ON OVERALL DIMENSIONS OF HOLLOW SECTIONS

UPTO 20.0mm – ±0.30	UPTO 80.0mm – ±0.70	UPTO 180.0mm – ±1.27	1. STRAIGHTNESS=1.7mm/M
UPTO 30.0mm – ±0.38	UPTO 100.0mm – ±0.80	UPTO 200.0mm – ±1.40	2. TWIST=1.7mm/M
UPTO 40.0mm – ±0.45	UPTO 120.0mm – ±0.90	UPTO 225.0mm – ±1.52	3. ANGULARITY= ±2°
UPTO 50.0mm – ±0.52	UPTO 140.0mm – ±1.00		4. FLATNESS =0.006xWIDTH
UPTO 60.0mm – ±0.60	UPTO 160.0mm – ±1.14		

JINDAL

SYMBOL OF QUALITY
AN ISO 9001 COMPANY

JINDAL ALUMINIUM LTD.

BANGALORE-560073 (INDIA)

1. ALL DIMENSIONS ARE IN mm.
2. ROUND OFF ALL SHARP CORNERS WITH 0.40 mm.
3. TOLERANCES WILL BE AS PER IS:6477-1983 UNLESS OTHERWISE SPECIFIED

PARTY'S NAME	GOYAL SALES CORPORATION, NEW DELHI
PARTY'S DRAWING No.	AS PER SAMPLE
ALLOY & TEMPER	6063 T6
DESCRIPTION	HEAT SINK SECTION

	NAME	DATE
DRAWN	J.P.KAUSHIK	25-05-2017
CHECKED		
APPROVED	B.NATARAJA	31-05-2017
SCALE		2:1
AREA mm^2		955.842
PERIMETER mm.		790.995
WEIGHT kg/m		2.581

DRAWING No.	SECTION No.
P-17153	–
S5410	S5410