| |
|---|
| P–17551 |
| S5574 |
| |

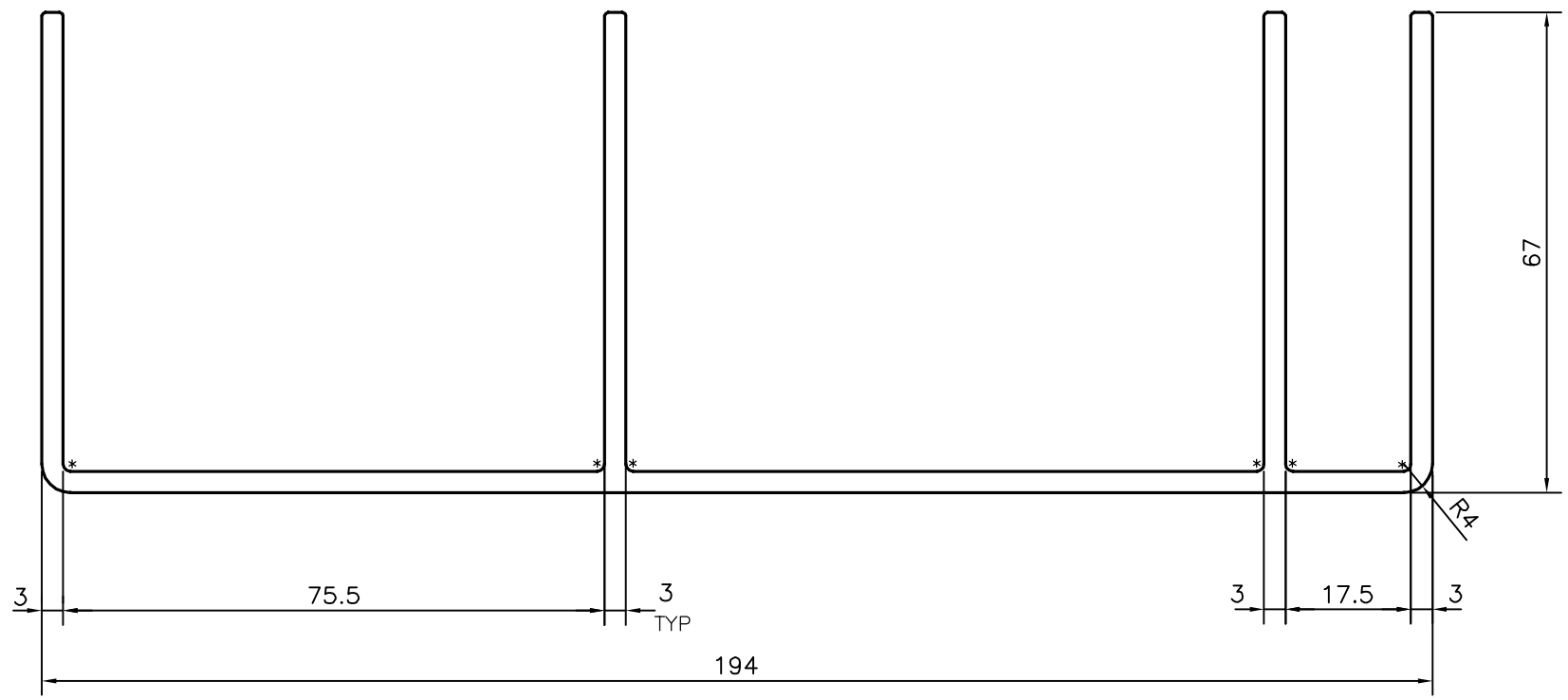


UNSPECIFIED RADIUS 0.5 mm

* = 1.0 RADIUS (6 PLACES)

| TOLERANCES ON OVERALL WIDTHS & WIDTHS ACROSS FLATS OF BARS, & REGULAR SECTIONS | | | |
|---|---|---|---|
| UPTO 6.40mm – ±0.20<br>UPTO 10.0mm – ±0.23<br>UPTO 12.0mm – ±0.25<br>UPTO 16.0mm – ±0.28<br>UPTO 25.0mm – ±0.30 | UPTO 32.0mm – ±0.38<br>UPTO 50.0mm – ±0.46<br>UPTO 60.0mm – ±0.53<br>UPTO 80.0mm – ±0.69<br>UPTO 100.0mm – ±0.75 | UPTO 120.0mm – ±0.85<br>UPTO 160.0mm – ±1.02<br>UPTO 200.0mm – ±1.14<br>UPTO 250.0mm – ±1.40<br>UPTO 300.0mm – ±1.65 | UPTO 320.00mm – ±1.70 |

JINDAL

SYMBOL OF QUALITY
AN ISO 9001 COMPANY

**JINDAL ALUMINIUM LTD.**

*BANGALORE–560073 (INDIA)*

| | NAME | DATE |
|---|---|---|
| DRAWN | J.P.KAUSHIK | 11–10–2017 |
| CHECKED | | |
| APPROVED | *B.NATARAJA* | 08–11–2017 |

1. ALL DIMENSIONS ARE IN mm.
2. ROUND OFF ALL SHARP CORNERS WITH 0.40 mm.
3. TOLERANCES WILL BE AS PER, IS:3965–1981 UNLESS OTHERWISE SPECIFIED

| | |
|---|---|
| SCALE | 1:1 |
| AREA $mm^2$ | 1343.991 |
| PERIMETER mm. | 898.274 |
| WEIGHT kg/m | 3.629 |

| | |
|---|---|
| PARTY'S NAME | PRESSTON ENGINEERING CORPORATION, BANGALORE |
| PARTY'S DRAWING No. | RMD60005CEO_REV_B |
| ALLOY & TEMPER | 6063 T6 |
| DESCRIPTION | DUCT PROFILE |

| DRAWING No. | SECTION No. |
|---|---|
| P–17551 | – |
| S5574 | S5574 |
| | |
| | |
| | |