| |
|---|
| P-17808 |
| S5656 |
| |

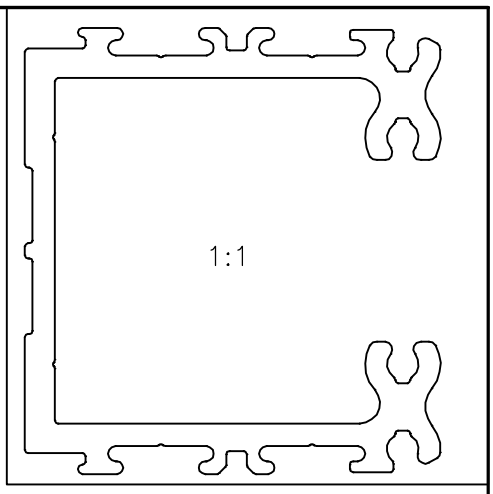


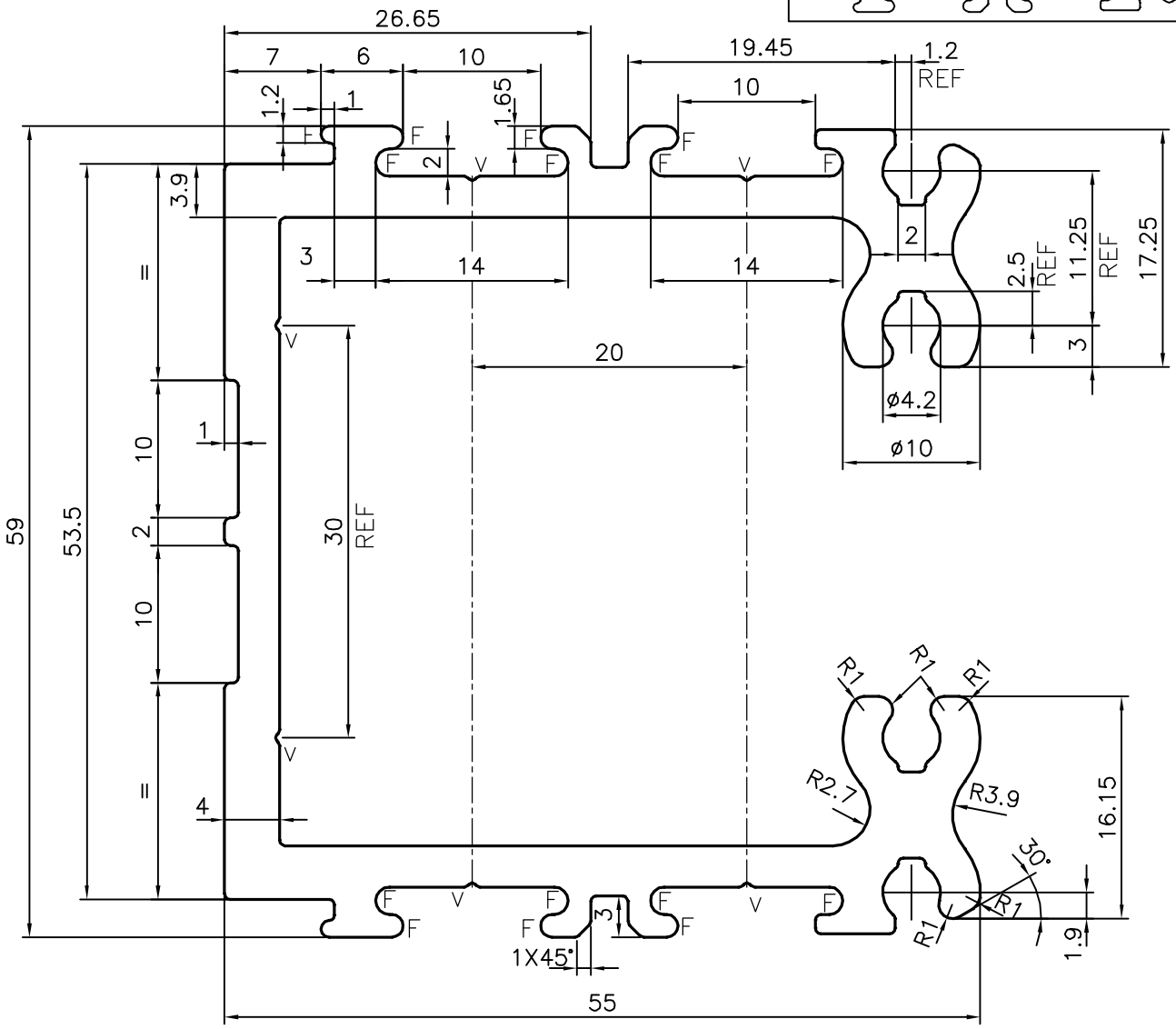


F = FULL RADIUS (14 PLACES)
V = V GROOVE 0.3x90° (6 PLACES)

| | | | |
|---|---|---|---|
| JINDAL<br>SYMBOL OF QUALITY<br>AN ISO 9001 COMPANY | ***JINDAL ALUMINIUM LTD.***<br>***BANGALORE-560073 (INDIA)*** | | NAME / DATE |
| | | DRAWN | J.P.KAUSHIK / 24-01-2018 |
| | | CHECKED | |
| | | APPROVED | B.NATARAJ / 05-02-2018 |

1. ALL DIMENSIONS ARE IN mm.
2. ROUND OFF ALL SHARP CORNERS WITH 0.40 mm.
3. TOLERANCES WILL BE AS PER IS:3965-1981, UNLESS OTHERWISE SPECIFIED

| | |
|---|---|
| SCALE | 2:1 |
| AREA $mm^2$ | 743.454 |
| PERIMETER mm. | 471.075 |
| WEIGHT kg/m | 2.007 |

| | |
|---|---|
| PARTY'S NAME | GLOBAL SYNDICATE, BANGALORE |
| PARTY'S DRAWING No. | AS PER DRAWING |
| ALLOY & TEMPER | 6063 T6 |
| DESCRIPTION | CURTAIN WALL SECTION-CLEAT |

| DRAWING No. | SECTION No. |
|---|---|
| P-17808 | – |
| S5656 | S5656 |
| | |
| | |
| | |