| | |
|---|---|
| P−17844 | |
| S5670 | |

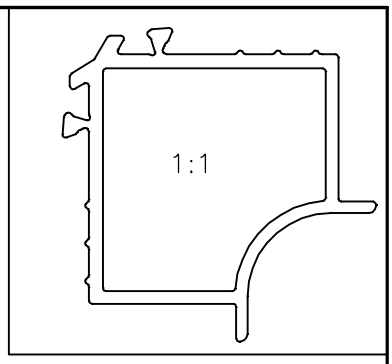


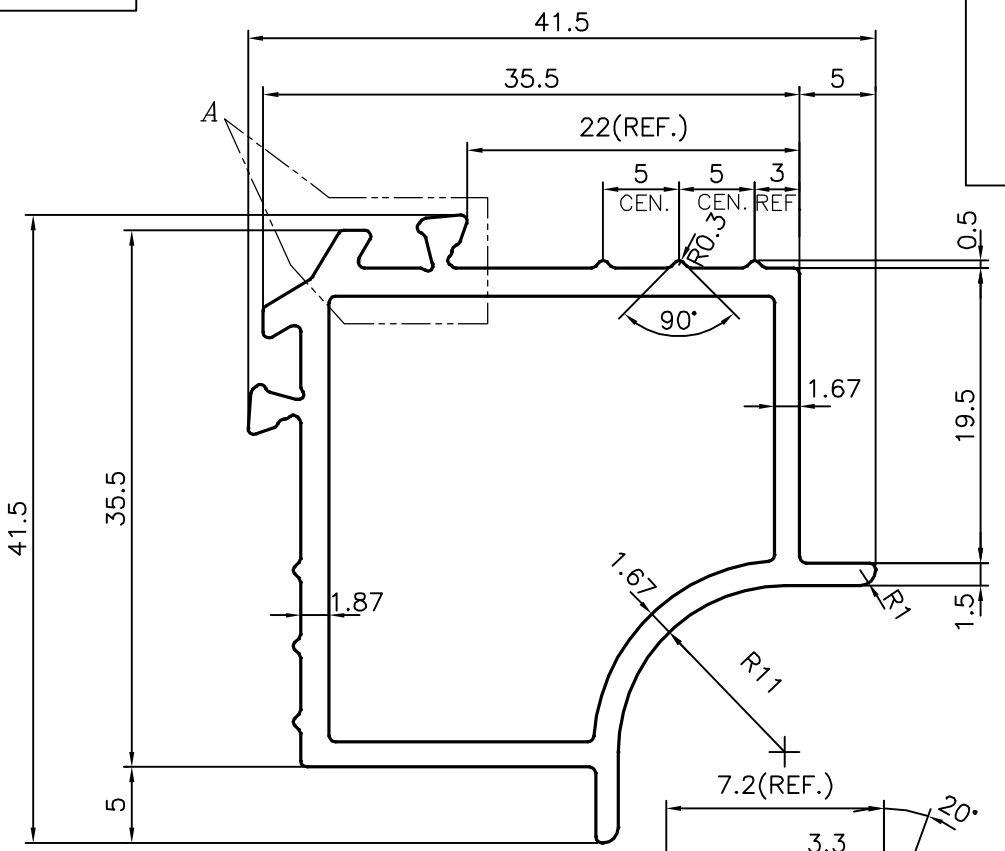


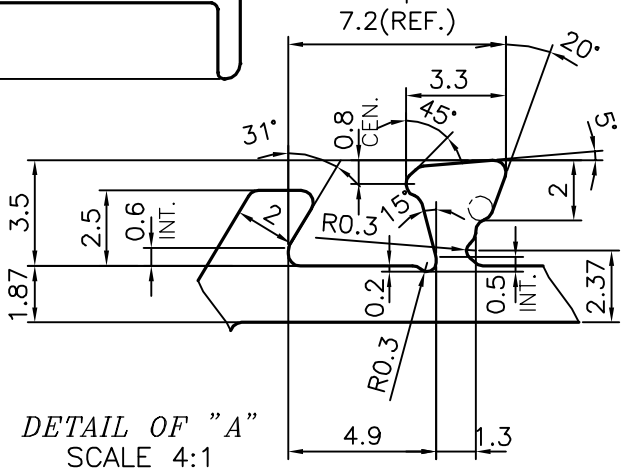


*DETAIL OF "A"*
SCALE 4:1

TOLERANCES ON OVERALL WIDTHS & WIDTHS ACROSS FLATS OF BARS, & REGULAR SECTIONS

| | | | |
|---|---|---|---|
| UPTO 6.40mm − ±0.20 | UPTO 32.0mm − ±0.38 | UPTO 120.0mm − ±0.85 | UPTO 320.00mm − ±1.70 |
| UPTO 10.0mm − ±0.23 | UPTO 50.0mm − ±0.46 | UPTO 160.0mm − ±1.02 | |
| UPTO 12.0mm − ±0.25 | UPTO 60.0mm − ±0.53 | UPTO 200.0mm − ±1.14 | |
| UPTO 16.0mm − ±0.28 | UPTO 80.0mm − ±0.69 | UPTO 250.0mm − ±1.40 | |
| UPTO 25.0mm − ±0.30 | UPTO 100.0mm − ±0.75 | UPTO 300.0mm − ±1.65 | |

JINDAL
SYMBOL OF QUALITY
AN ISO 9001 COMPANY

# JINDAL ALUMINIUM LTD.

*BANGALORE−560073 (INDIA)*

| | NAME | DATE |
|---|---|---|
| DRAWN | J.P.KAUSHIK | 05−02−2018 |
| CHECKED | | |
| APPROVED | B.NATARAJ | 09−02−2018 |

1. ALL DIMENSIONS ARE IN mm.
2. ROUND OFF ALL SHARP CORNERS WITH 0.40 mm.
3. TOLERANCES WILL BE AS PER IS:6477−1983, UNLESS OTHERWISE SPECIFIED

| | |
|---|---|
| SCALE | 2:1 |
| AREA $mm^2$ | 254.75 |
| PERIMETER mm. | 174.58 |
| WEIGHT kg/m | 0.688 |

| | |
|---|---|
| PARTY'S NAME | VIVANT SOLUTION PVT. LTD., FARIDABAD |
| PARTY'S DRAWING No. | AS PER DRAWING−VS148−25I |
| ALLOY & TEMPER | 6063 T6 |
| DESCRIPTION | AIR GRILL SECTION |

| DRAWING No. | SECTION No. |
|---|---|
| P−17844 | − |
| S5670 | S5670 |