P-18067-4

S5813

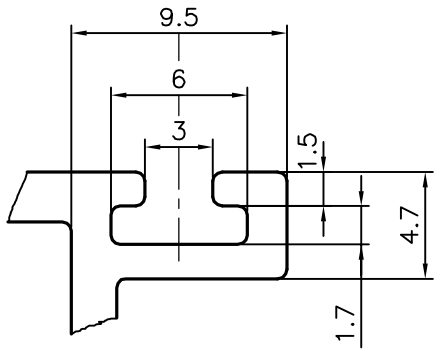

DETAIL OF "B"
SCALE 3:1

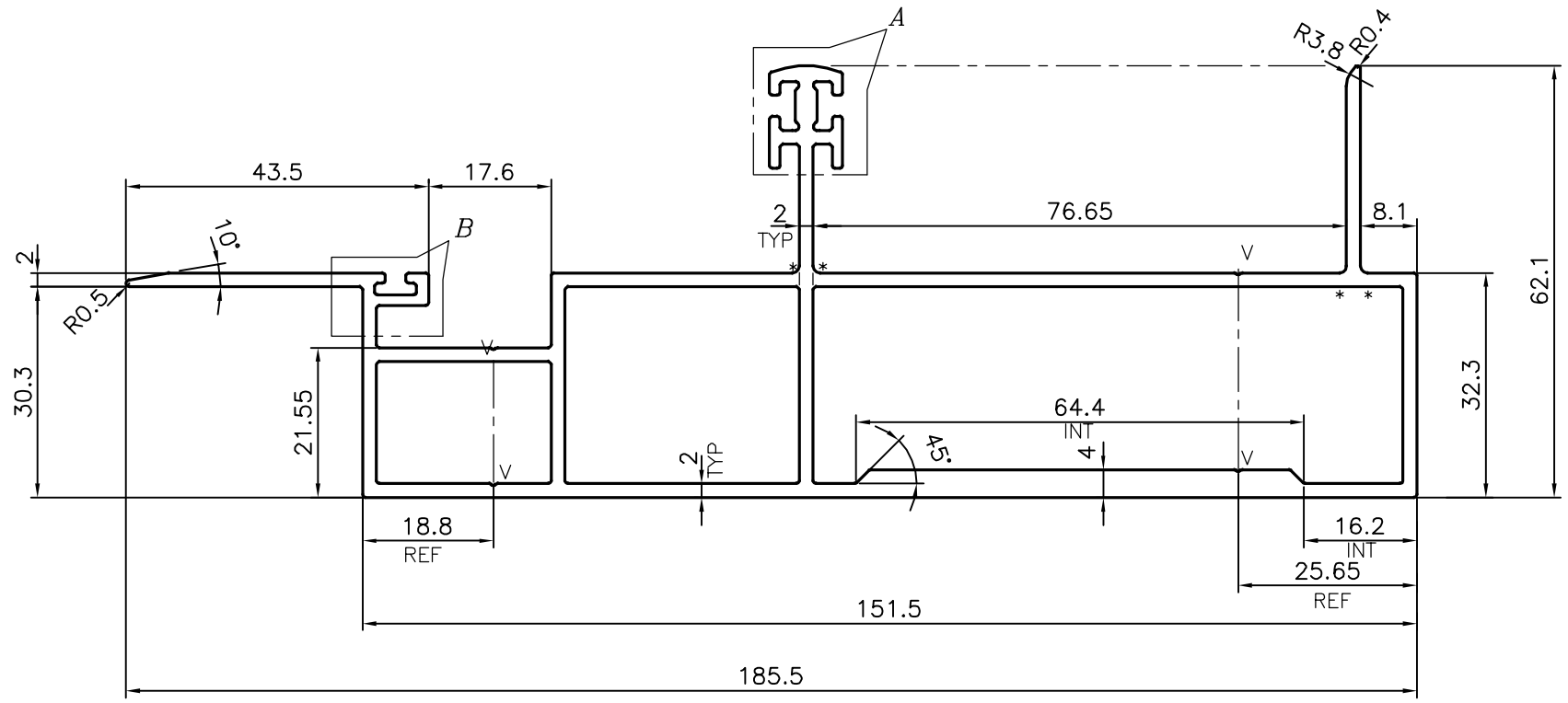

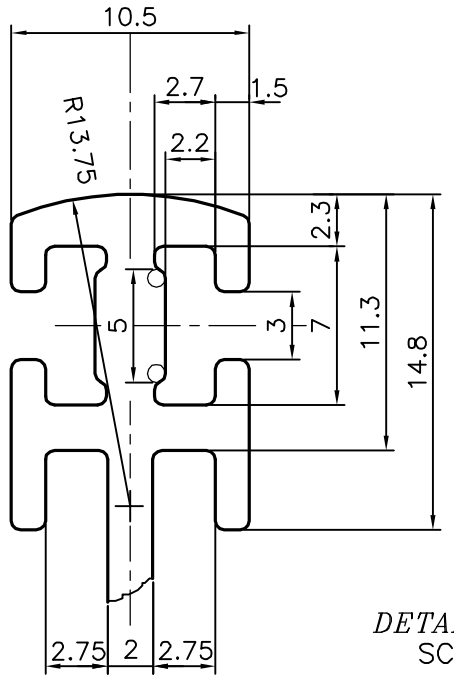

DETAIL OF "A"
SCALE 3:1

* = 1.0 RADIUS (4 PLACES)

V = V GROOVE 0.3x90° (4 PLACES)

JINDAL SYMBOL OF QUALITY AN ISO 9001 COMPANY	*JINDAL ALUMINIUM LTD.* *BANGALORE-560073 (INDIA)*		NAME / DATE
		DRAWN	J.P.KAUSHIK 03-05-2018
		CHECKED	
		APPROVED	*B.NATARAJA* 05-05-2018
1. ALL DIMENSIONS ARE IN mm. 2. ROUND OFF ALL SHARP CORNERS WITH 0.40 mm. 3. TOLERANCES WILL BE AS PER IS:6477-1983 UNLESS OTHERWISE SPECIFIED		SCALE	1:1
		AREA mm^2	1221.802
		PERIMETER mm.	655.309
PARTY'S NAME	V & G FACADE TECHNOLOGY, AHMEDABAD	WEIGHT kg/m	3.299
		DRAWING No.	SECTION No.
PARTY'S DRAWING No.	AS PER DRAWING	P-18067-4	–
ALLOY & TEMPER	63400 WP	S5813	S5813
DESCRIPTION	MALE MULLION SECTION		