P-18068-3
S5814

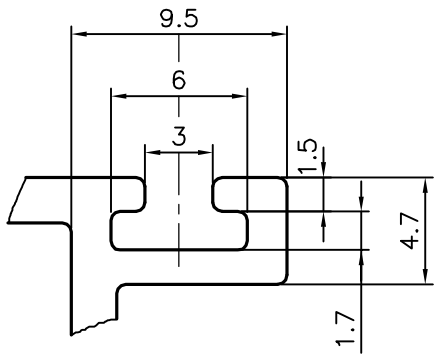

DETAIL OF "B"
SCALE 3:1

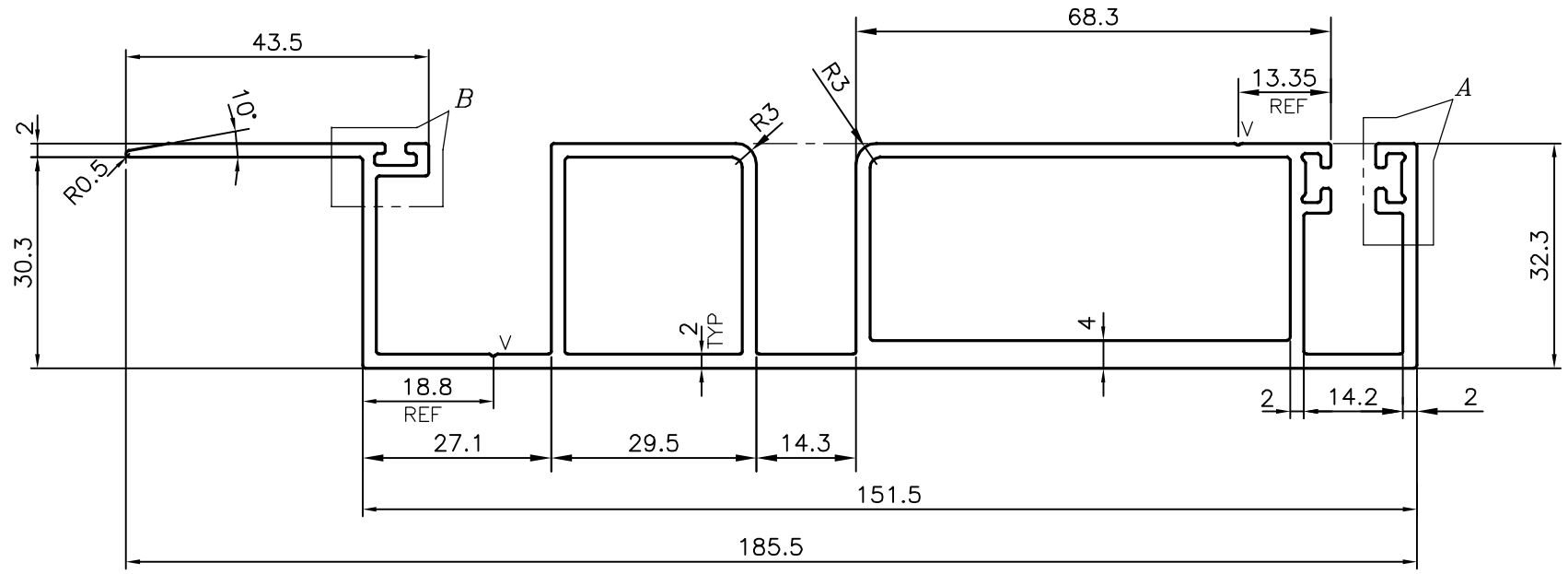

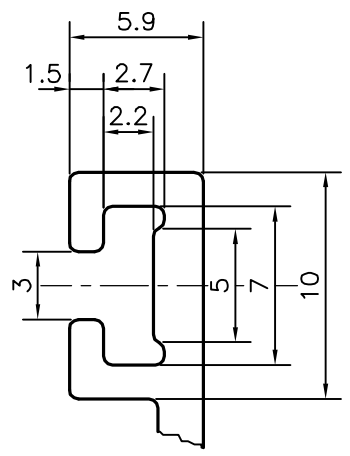

DETAIL OF "A"
SCALE 3:1

V = V GROOVE 0.3x90° (2 PLACES)

JINDAL
SYMBOL OF QUALITY
AN ISO 9001 COMPANY

JINDAL ALUMINIUM LTD.
BANGALORE-560073 (INDIA)

1. ALL DIMENSIONS ARE IN mm.
2. ROUND OFF ALL SHARP CORNERS WITH 0.40 mm.
3. TOLERANCES WILL BE AS PER IS:6477-1983 UNLESS OTHERWISE SPECIFIED

		NAME	DATE
DRAWN		J.P.KAUSHIK	03-05-2018
CHECKED			
APPROVED		*B.NATARAJA*	05-05-2018
SCALE			1:1
AREA mm^2			1077.583
PERIMETER mm.			682.936
WEIGHT kg/m			2.909

PARTY'S NAME	V & G FACADE TECHNOLOGY, AHMEDABAD
PARTY'S DRAWING No.	AS PER DRAWING
ALLOY & TEMPER	63400 WP
DESCRIPTION	FEMALE MULLION SECTION

DRAWING No.	SECTION No.
P-18068-3	–
S5814	S5814