P–18219
S5859

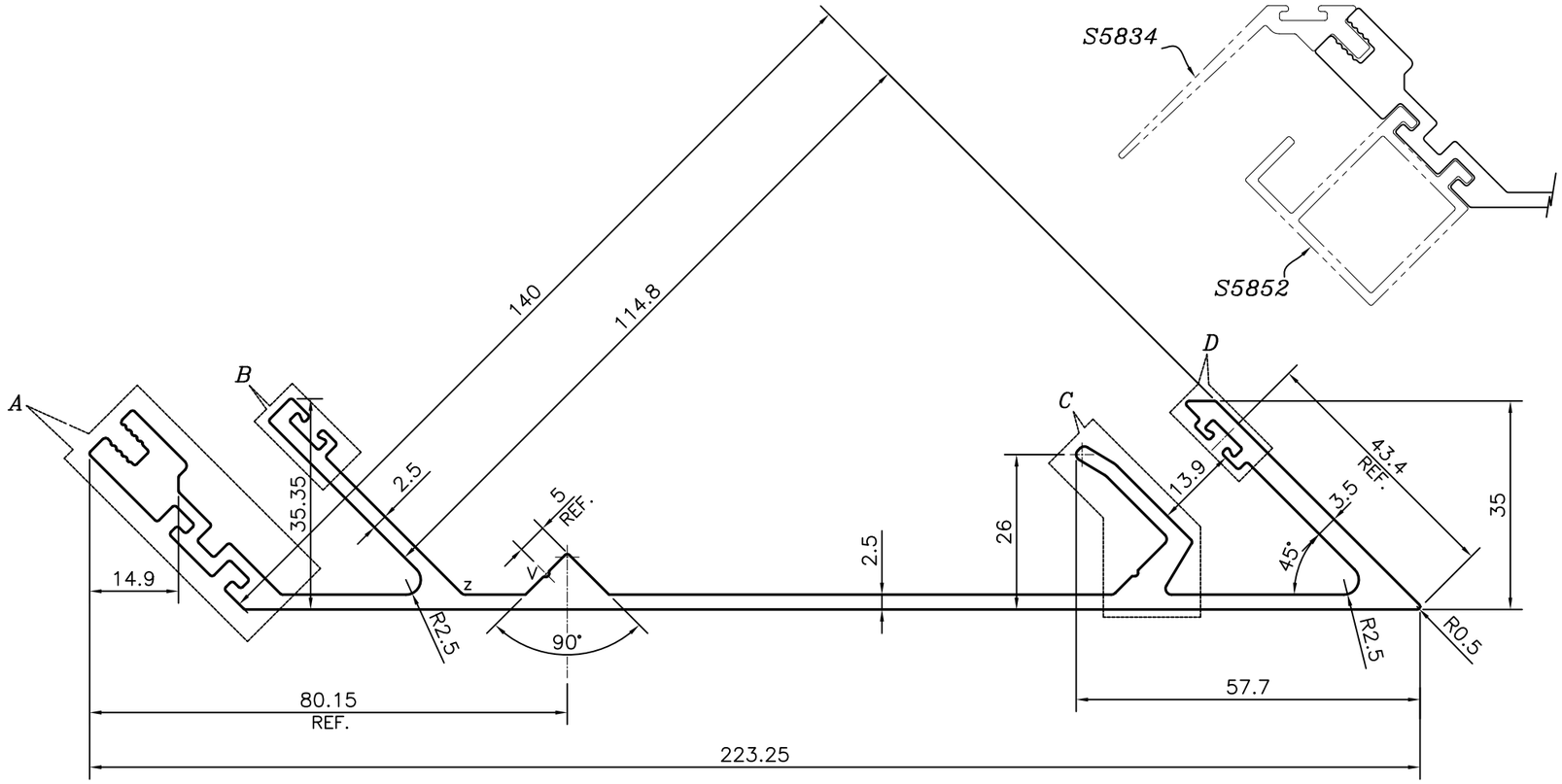

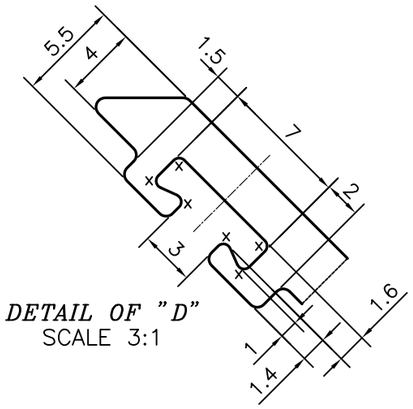

DETAIL OF "D"
SCALE 3:1

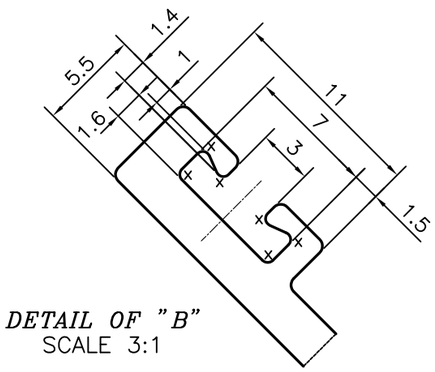

DETAIL OF "B"
SCALE 3:1

V = VEE GROOVE 0.5x90° (2 PLACES)
X = RADIUS 0.4 mm. (12 PLACES)
Z = RADIUS 1 mm. (7 PLACES)

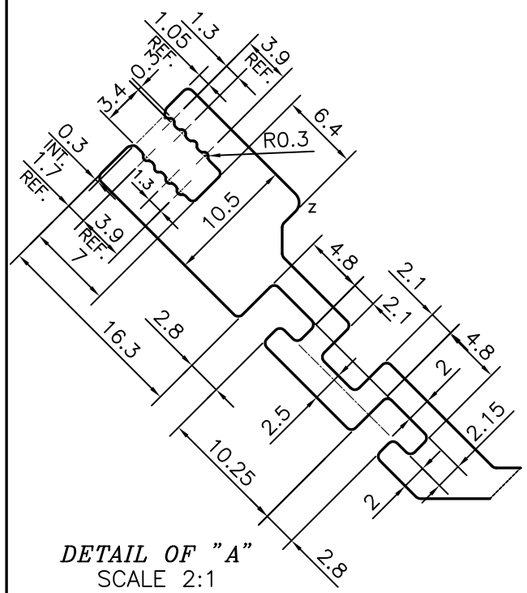

DETAIL OF "A"
SCALE 2:1

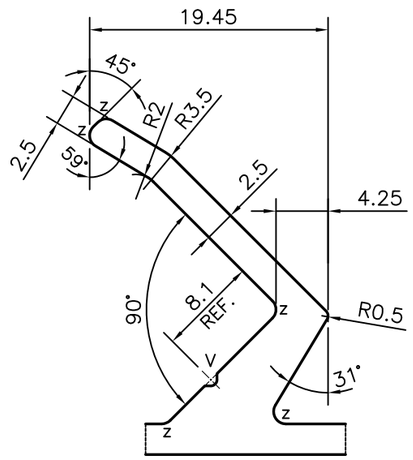

DETAIL OF "C"
SCALE 2:1

TOLERANCES ON OVERALL WIDTHS & WIDTHS ACROSS FLATS OF BARS, & REGULAR SECTIONS			
UPTO 6.40mm – ±0.20	UPTO 32.0mm – ±0.38	UPTO 120.0mm – ±0.85	UPTO 320.00mm – ±1.70
UPTO 10.0mm – ±0.23	UPTO 50.0mm – ±0.46	UPTO 160.0mm – ±1.02	
UPTO 12.0mm – ±0.25	UPTO 60.0mm – ±0.53	UPTO 200.0mm – ±1.14	
UPTO 16.0mm – ±0.28	UPTO 80.0mm – ±0.69	UPTO 250.0mm – ±1.40	
UPTO 25.0mm – ±0.30	UPTO 100.0mm – ±0.75	UPTO 300.0mm – ±1.65	

JINDAL
SYMBOL OF QUALITY
AN ISO 9001 COMPANY

JINDAL ALUMINIUM LTD.
BANGALORE–560073 (INDIA)

1. ALL DIMENSIONS ARE IN mm.
2. ROUND OFF ALL SHARP CORNERS WITH 0.40 mm.
3. TOLERANCES WILL BE AS PER IS:3965–1981 , UNLESS OTHERWISE SPECIFIED

		NAME	DATE
DRAWN		PARVESH	15–05–2018
CHECKED			
APPROVED		B.NATARAJA	28–05–2018
SCALE			1:1
AREA	mm^2		1174.445
PERIMETER	mm.		788.081
WEIGHT	kg/m		3.171

PARTY'S NAME	GLASSWALL SYSTEMS INDIA PVT. LTD., MUMBAI
PARTY'S DRAWING No.	95168
ALLOY & TEMPER	6063 T6
DESCRIPTION	CURTAIN WALL SECTION

DRAWING No.	SECTION No.
P–18219	–
S5859	S5859