P−18311−1	
S5891	

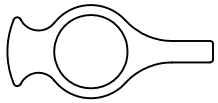

SCALE:− 1:1

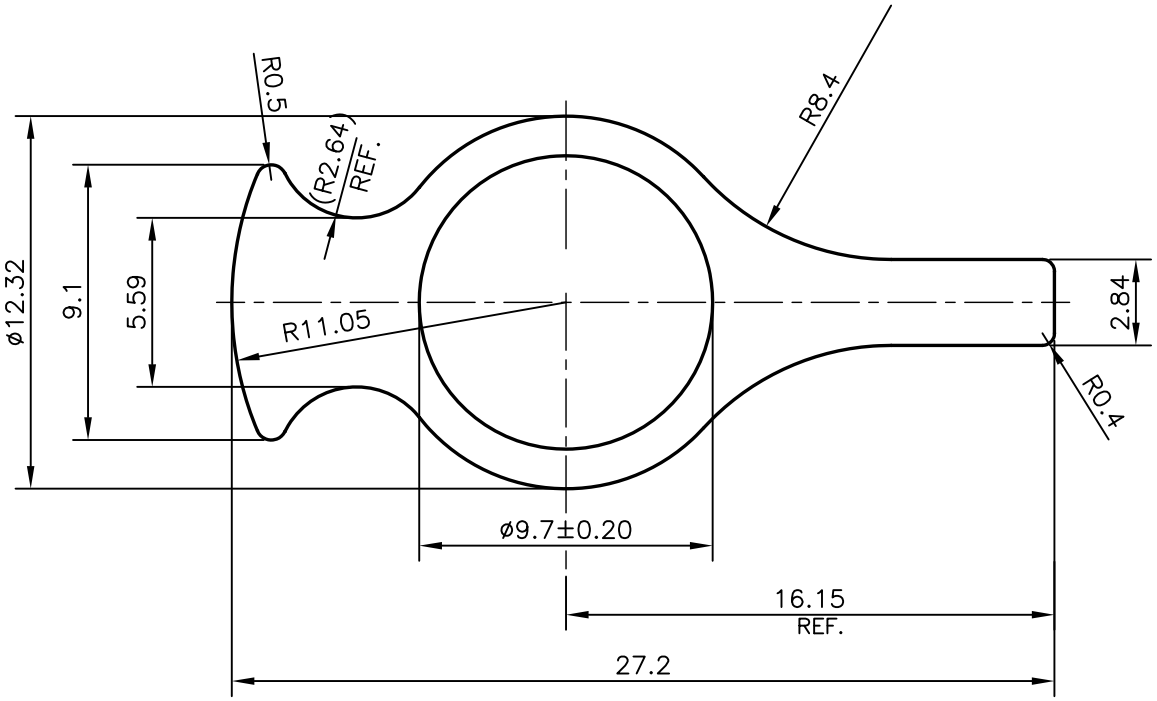

JINDAL SYMBOL OF QUALITY AN ISO 9001 COMPANY	*JINDAL ALUMINIUM LTD.* *BANGALORE−560073 (INDIA)*		NAME	DATE
		DRAWN	PARVESH	14−06−2018
		CHECKED		
		APPROVED	*B.NATARAJA*	16−06−2018
1. ALL DIMENSIONS ARE IN mm. 2. ROUND OFF ALL SHARP CORNERS WITH 0.40 mm. 3. TOLERANCES WILL BE AS PER IS:6477−1983 , UNLESS OTHERWISE SPECIFIED		SCALE		4:1
		AREA mm^2		113.706
		PERIMETER mm.		70.297
		WEIGHT kg/m		0.307
PARTY'S NAME	TITAN COMPANY LUMITED, HOSUR	DRAWING No.		SECTION No.
PARTY'S DRAWING No.	PD−811	P−18311−1		−
		S5891		S5891
ALLOY & TEMPER	6063 T6			
DESCRIPTION	HAND SECTION			