P−18884
S6048

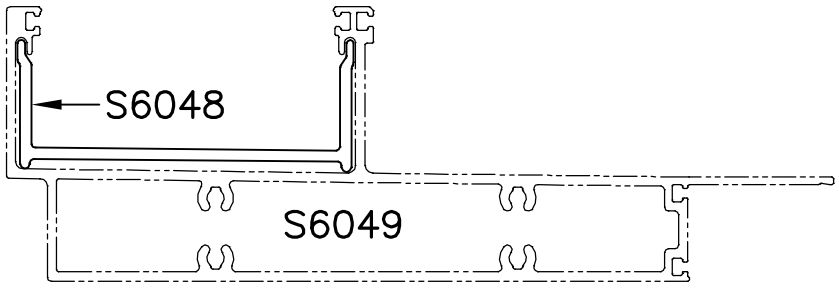

SCLAE1:2

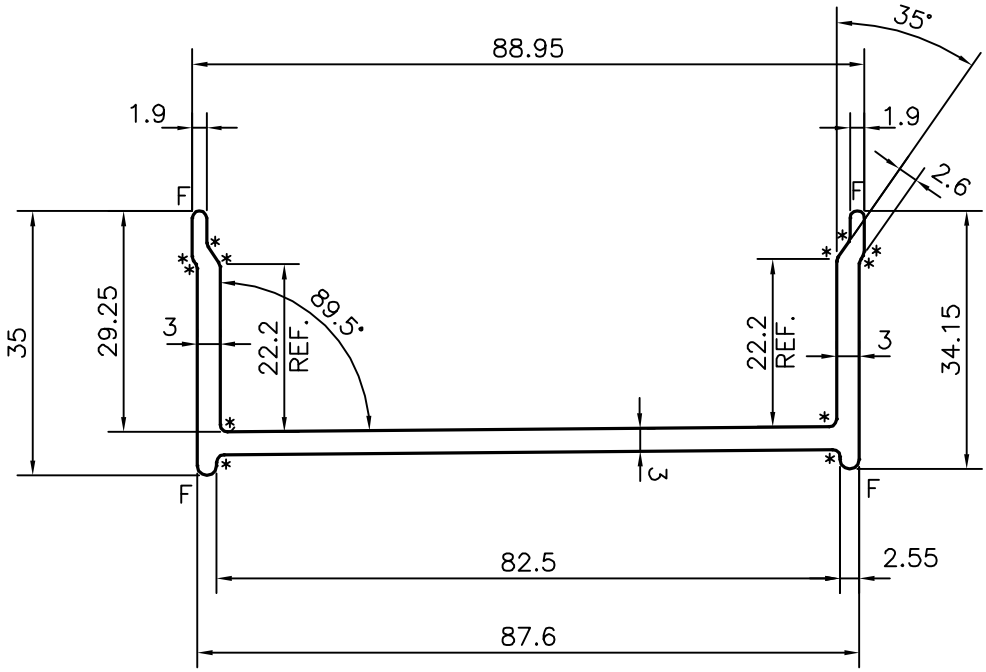

* = R1 mm (12 PLACES)

F = FULL RADIUS (4 PLACES)

JINDAL SYMBOL OF QUALITY AN ISO 9001 COMPANY	*JINDAL ALUMINIUM LTD.* *BANGALORE−560073 (INDIA)*		NAME	DATE
		DRAWN	DARPAN	19−11−2018
		CHECKED		
		APPROVED	B.NATARAJA	01−12−2018
1. ALL DIMENSIONS ARE IN mm. 2. ROUND OFF ALL SHARP CORNERS WITH 0.40 mm. 3. TOLERANCES WILL BE AS PER IS:3965−1981 , UNLESS OTHERWISE SPECIFIED		SCALE		1:1
		AREA mm^2		437.977
		PERIMETER mm.		301.156
		WEIGHT kg/m		1.183
PARTY'S NAME	GLOBAL SYNDICATE, BANGALORE	DRAWING No.		SECTION No.
PARTY'S DRAWING No.	AS PER DRAWING	P−18884		−
ALLOY & TEMPER	6063 T6	S6048		S6048
DESCRIPTION	GUTTER SLEEVE SECTION			