P–18882
S6050

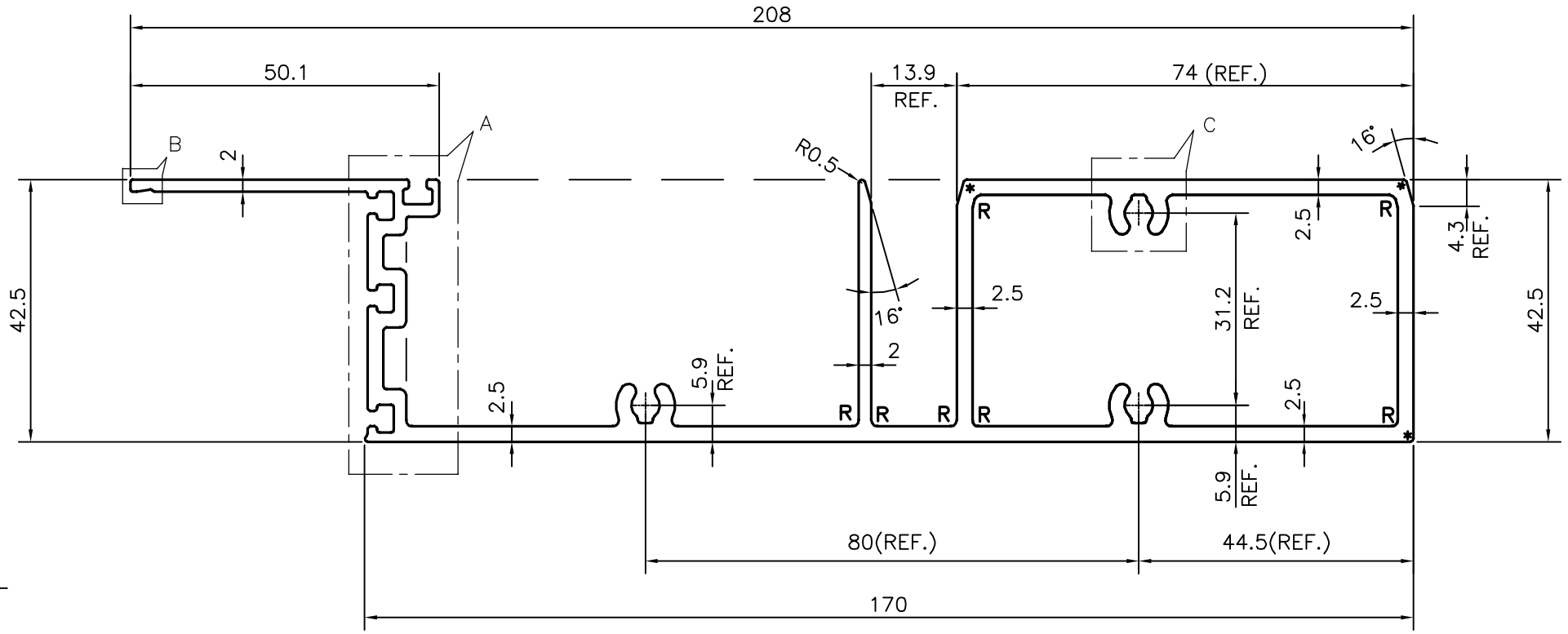

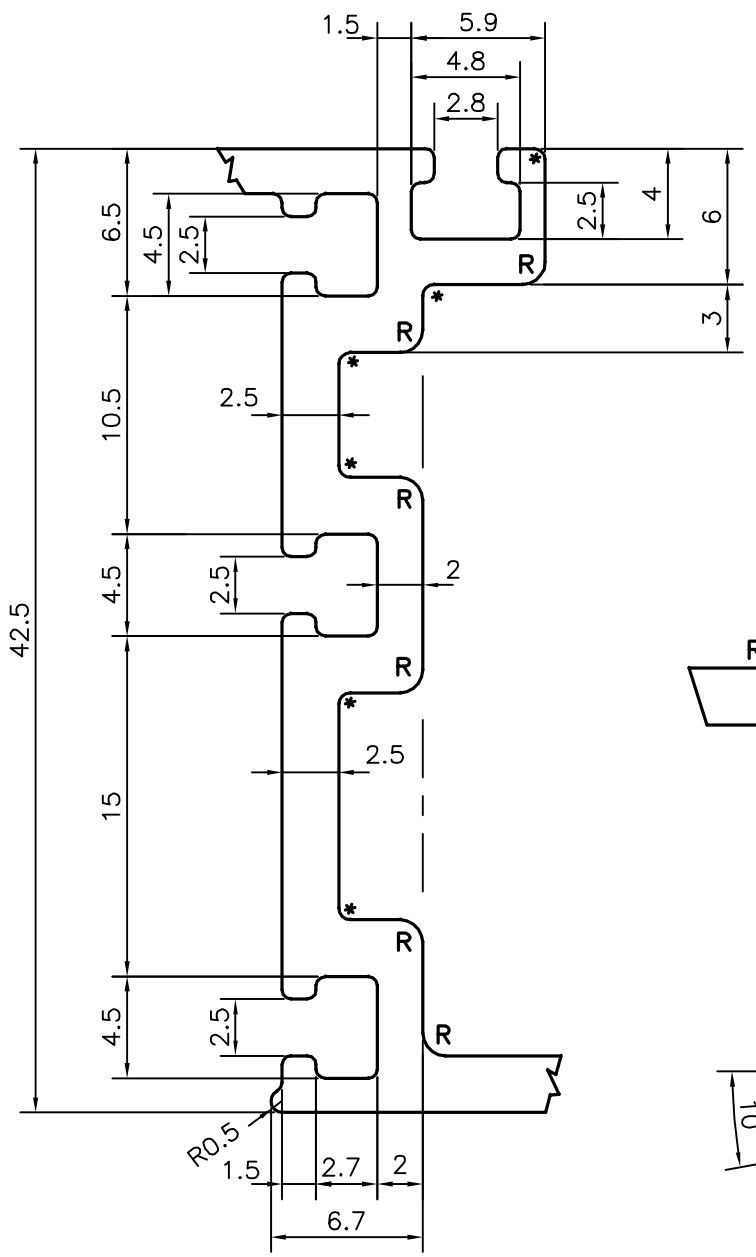

DETAIL A
3:1

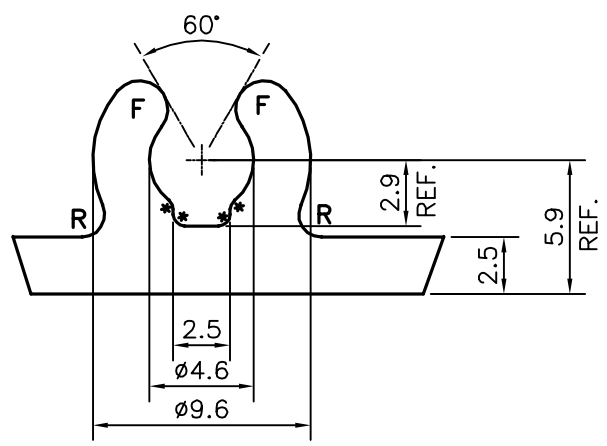

DETAIL C
3:1

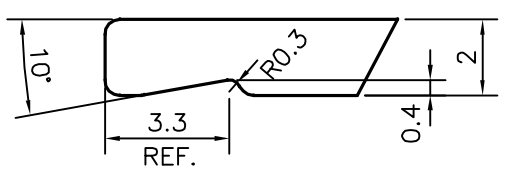

DETAIL B
5:1

F = FULL RADIUS (6 PLACES)
R = R1 mm (19 PLACES)
* = R0.5 mm (21 PLACES)

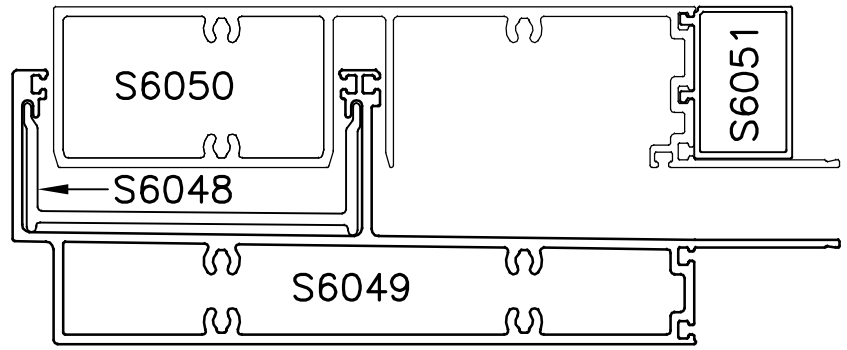

SCLAE1:2

JINDAL SYMBOL OF QUALITY AN ISO 9001 COMPANY	*JINDAL ALUMINIUM LTD.* *BANGALORE–560073 (INDIA)*		NAME	DATE
		DRAWN	DARPAN	20–11–2018
		CHECKED		
		APPROVED	B.NATARAJA	01–12–2018
1. ALL DIMENSIONS ARE IN mm. 2. ROUND OFF ALL SHARP CORNERS WITH 0.40 mm. 3. TOLERANCES WILL BE AS PER IS:6477–1983 , UNLESS OTHERWISE SPECIFIED		SCALE		1:1
		AREA mm^2		1217.034
		PERIMETER mm.		745.131
		WEIGHT kg/m		3.286
PARTY'S NAME	GLOBAL SYNDICATE, BANGALORE	DRAWING No.		SECTION No.
PARTY'S DRAWING No.	AS PER DRAWING	P–18882		–
ALLOY & TEMPER	6063 T6	S6050		S6050
DESCRIPTION	SILL TRANSOM SECTION			