P–18983
S6140

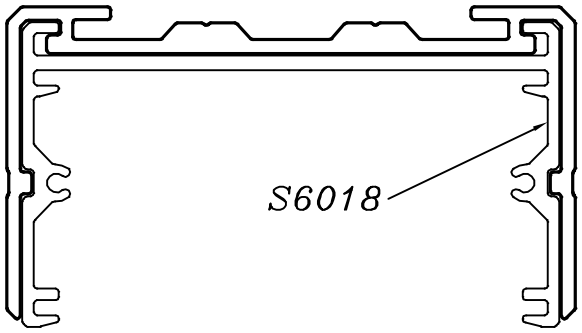

SCALE:– 1:1

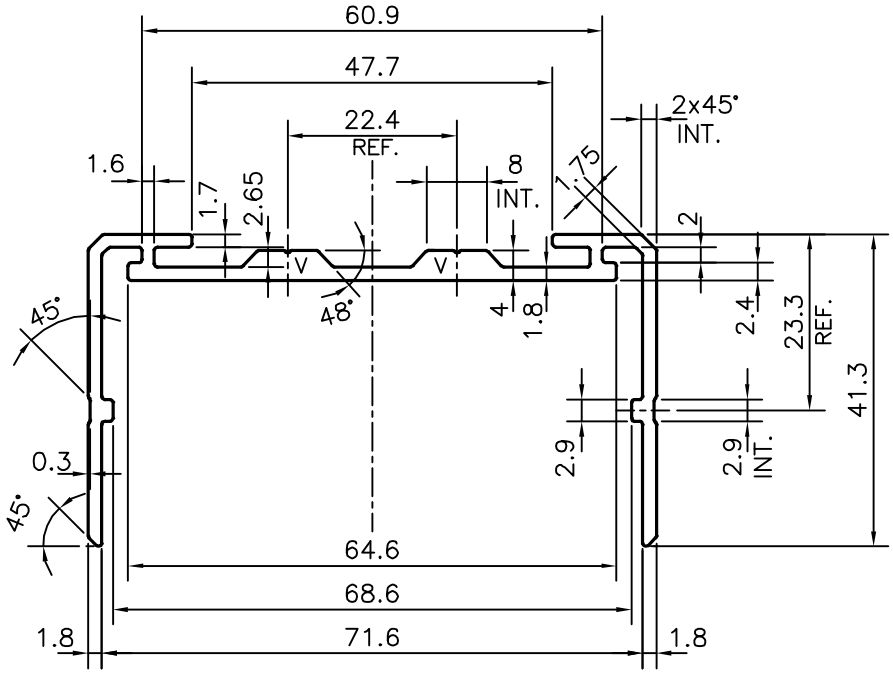

V = " V " GROOVE 0.30x90° (2 PLACES)

JINDAL SYMBOL OF QUALITY AN ISO 9001 COMPANY	*JINDAL ALUMINIUM LTD.* *BANGALORE–560073 (INDIA)*		NAME	DATE
		DRAWN	DARPAN	25–12–2018
		CHECKED		
		APPROVED	B.NATARAJA	20–02–2019
1. ALL DIMENSIONS ARE IN mm. 2. ROUND OFF ALL SHARP CORNERS WITH 0.40 mm. 3. TOLERANCES WILL BE AS PER IS:3965–1981 , UNLESS OTHERWISE SPECIFIED		SCALE		1:1
		AREA mm^2		362.435
		PERIMETER mm.		357.942
		WEIGHT kg/m		0.979
PARTY'S NAME	BAJAJ ELECTRICALS LTD., MUMBAI	DRAWING No.		SECTION No.
PARTY'S DRAWING No.	AS PER AUTOCAD DRAWING	P–18983		–
ALLOY & TEMPER	6063 T6	S6140		S6140
DESCRIPTION	ELECTRICAL SECTION			