P−19276
S6188

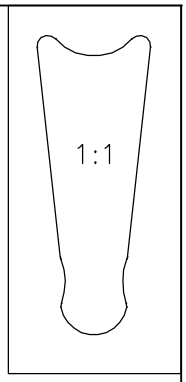

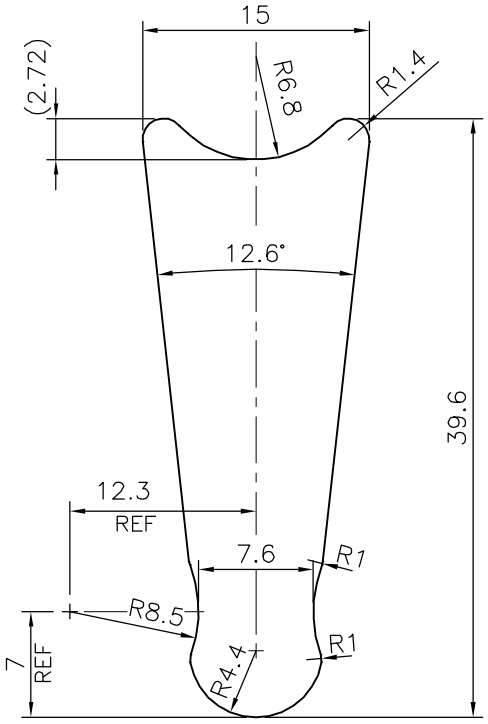

TOLERANCES ON OVERALL DIMENSIONS OF HOLLOW SECTIONS

UPTO 20.0mm − ±0.30	UPTO 80.0mm − ±0.70	UPTO 180.0mm − ±1.27	1. STRAIGHTNESS=1.7mm/M
UPTO 30.0mm − ±0.38	UPTO 100.0mm − ±0.80	UPTO 200.0mm − ±1.40	2. TWIST=1.7mm/M
UPTO 40.0mm − ±0.45	UPTO 120.0mm − ±0.90	UPTO 225.0mm − ±1.52	3. ANGULARITY= ±2°
UPTO 50.0mm − ±0.52	UPTO 140.0mm − ±1.00		4. FLATNESS =0.006xWIDTH
UPTO 60.0mm − ±0.60	UPTO 160.0mm − ±1.14		

JINDAL

SYMBOL OF QUALITY
AN ISO 9001 COMPANY

JINDAL ALUMINIUM LTD.

BANGALORE−560073 (INDIA)

	NAME	DATE
DRAWN	J.P.KAUSHIK	14−03−2019
CHECKED		
APPROVED	B.NATARAJA	18−03−2019

1. ALL DIMENSIONS ARE IN mm.
2. ROUND OFF ALL SHARP CORNERS WITH 0.40 mm.
3. TOLERANCES WILL BE AS PER IS:3965−1981 UNLESS OTHERWISE SPECIFIED

SCALE	2:1
AREA mm^2	409.675
PERIMETER mm.	100.193
WEIGHT kg/m	1.106

PARTY'S NAME	SLN ENTERPRISES, BANGALORE
PARTY'S DRAWING No.	AS PER DRAWING
ALLOY & TEMPER	6005 T6
DESCRIPTION	MISC. SECTION

DRAWING No.	SECTION No.
P−19276	−
S6188	S6188