P–19308
S6196

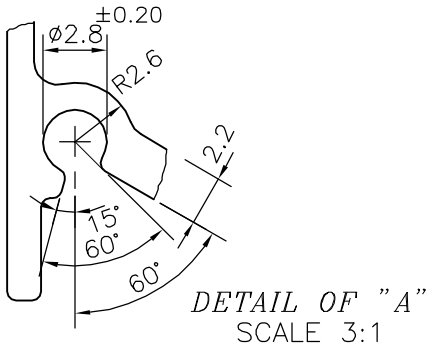

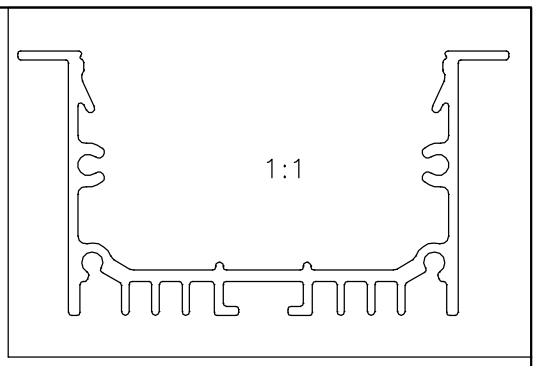

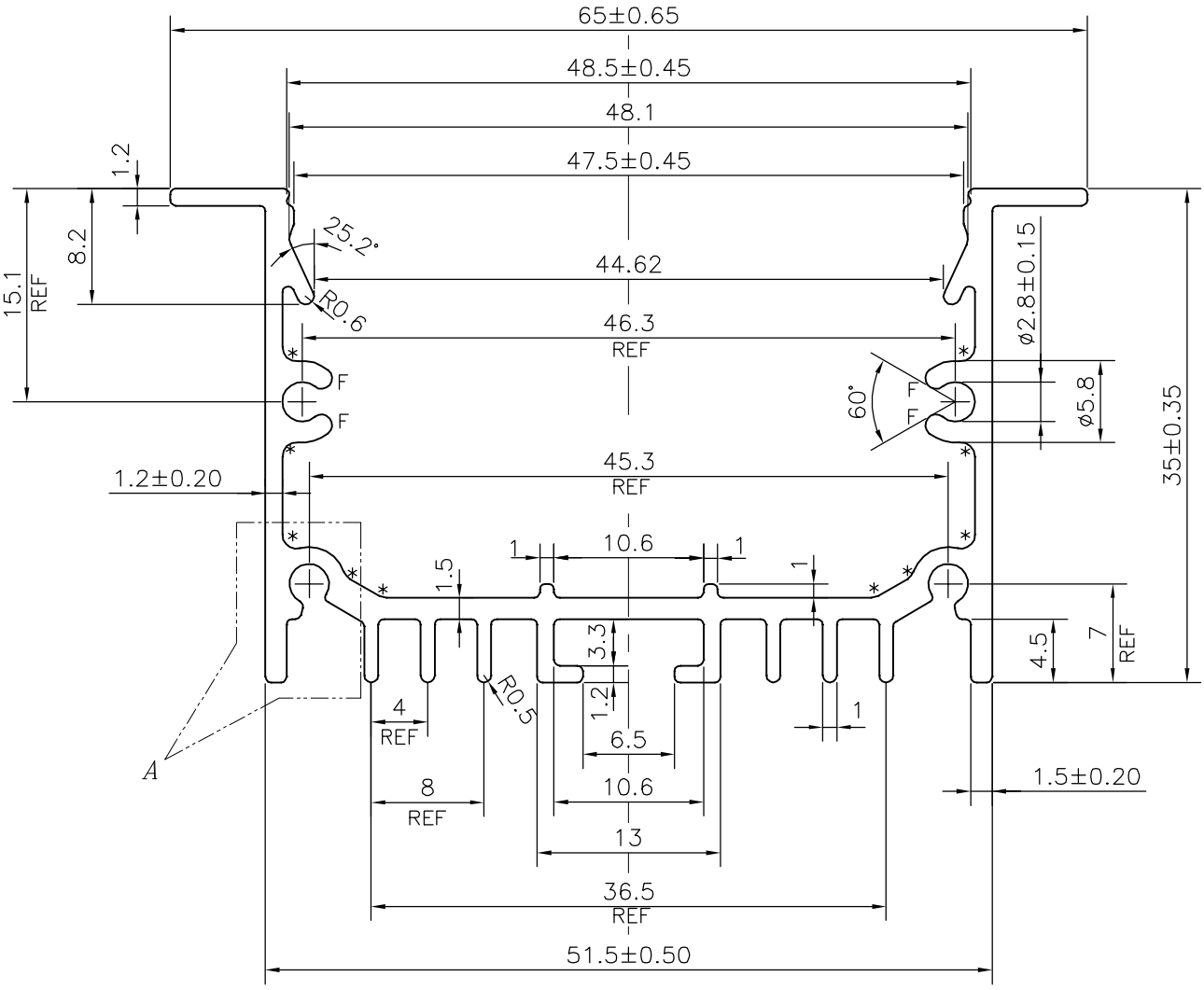

F = FULL RADIUS (2 PLACES)
* = 1.0 RADIUS (10 PLACES)

			NAME	DATE
SYMBOL OF QUALITY AN ISO 9001 COMPANY	*JINDAL ALUMINIUM LTD.* *BANGALORE–560073 (INDIA)*	DRAWN	J.P.KAUSHIK	23–03–2019
		CHECKED		
		APPROVED	*B.NATARAJA*	02–04–2019

1. ALL DIMENSIONS ARE IN mm.
2. ROUND OFF ALL SHARP CORNERS WITH 0.40 mm.
3. TOLERANCES WILL BE AS PER IS:3965–1981 , UNLESS OTHERWISE SPECIFIED

SCALE	2:1
AREA mm^2	273.857
PERIMETER mm.	381.821
WEIGHT kg/m	0.739

PARTY'S NAME	CHANDRA LAMP SHADES, BANGALORE
PARTY'S DRAWING No.	AS PER DRAWING
ALLOY & TEMPER	6063 T6
DESCRIPTION	HEAT SINK SECTION

DRAWING No.	SECTION No.
P–19308	–
S6196	S6196