P–19310
S6198

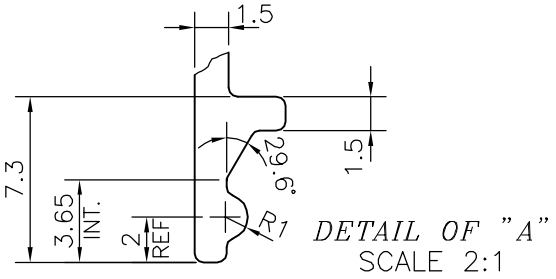

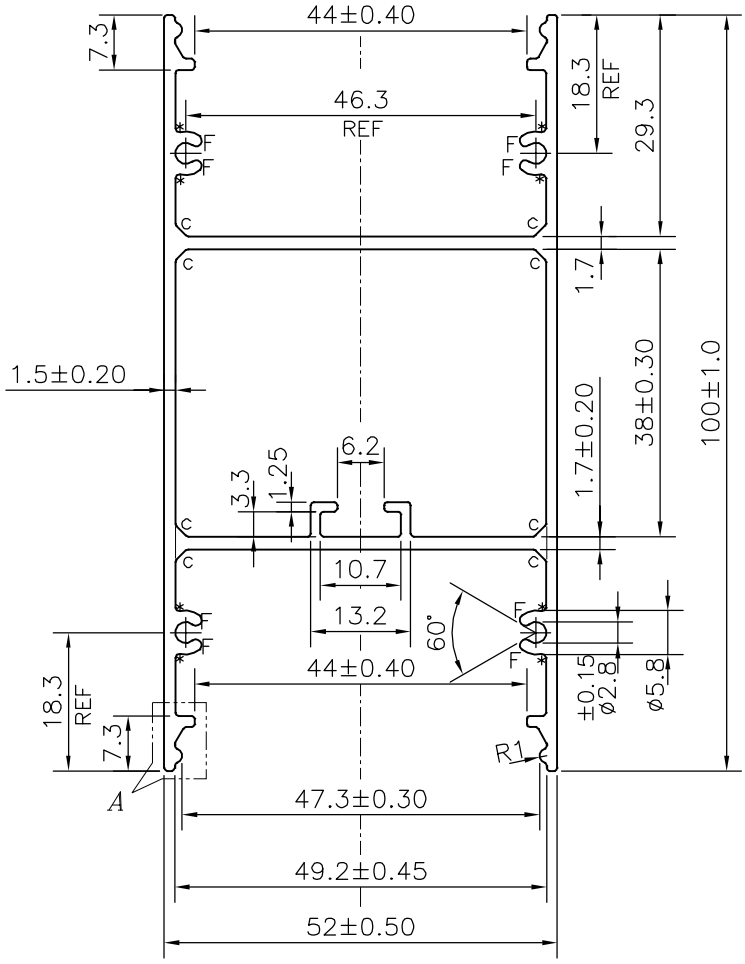

C = CHAMFER 1.5x45° (8 PLACES)
F = FULL RADIUS (8 PLACES)
* = 0.50 RADIUS (8 PLACES)

			NAME	DATE
SYMBOL OF QUALITY AN ISO 9001 COMPANY	*JINDAL ALUMINIUM LTD.* *BANGALORE–560073 (INDIA)*	DRAWN	J.P.KAUSHIK	23–03–2019
		CHECKED		
		APPROVED	*B.NATARAJA*	02–04–2019

1. ALL DIMENSIONS ARE IN mm.
2. ROUND OFF ALL SHARP CORNERS WITH 0.40 mm.
3. TOLERANCES WILL BE AS PER IS:6477–1983 , UNLESS OTHERWISE SPECIFIED

SCALE	1:1
AREA mm^2	559.864
PERIMETER mm.	480.675
WEIGHT kg/m	1.512

		DRAWING No.	SECTION No.
PARTY'S NAME	CHANDRA LAMP SHADES, BANGALORE		
PARTY'S DRAWING No.	AS PER DRAWING	P–19310	–
ALLOY & TEMPER	6063 T6	S6198	S6198
DESCRIPTION	MISC. SECTION		