P–19373
S6213

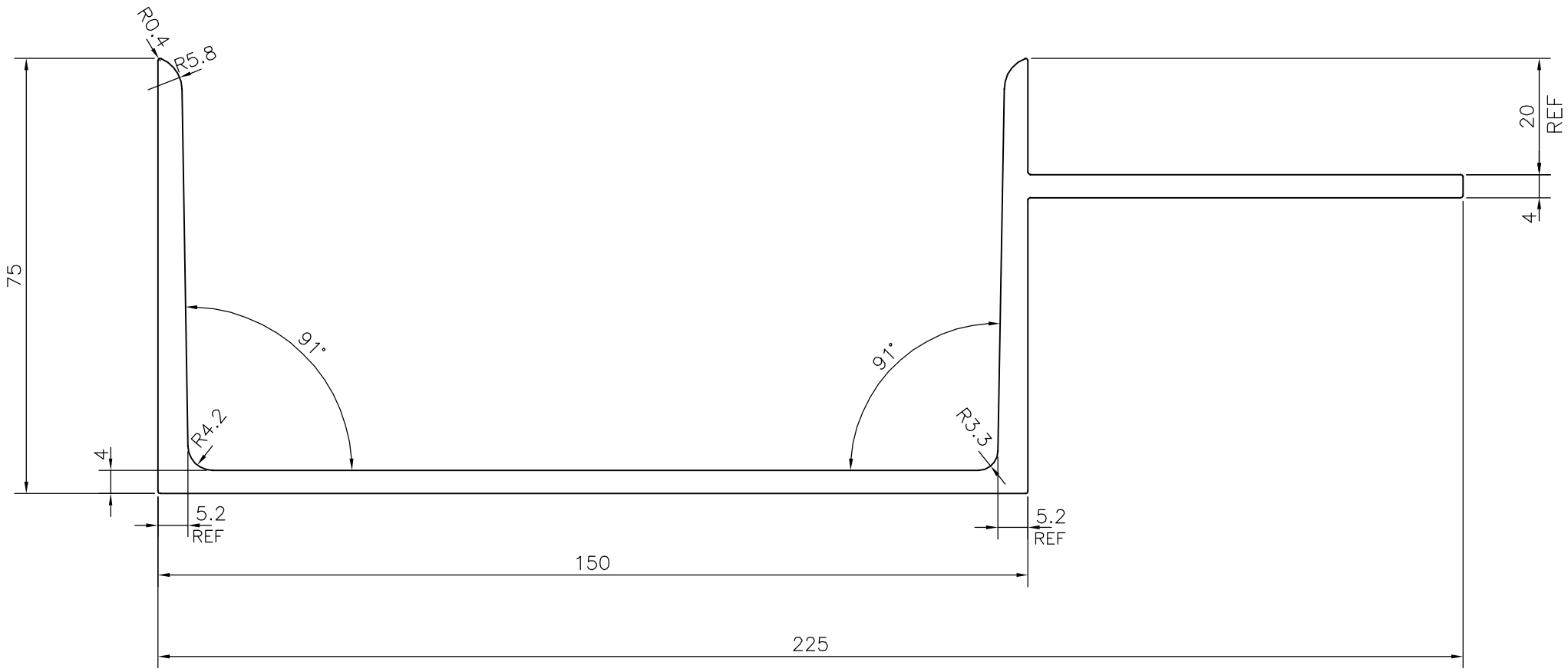

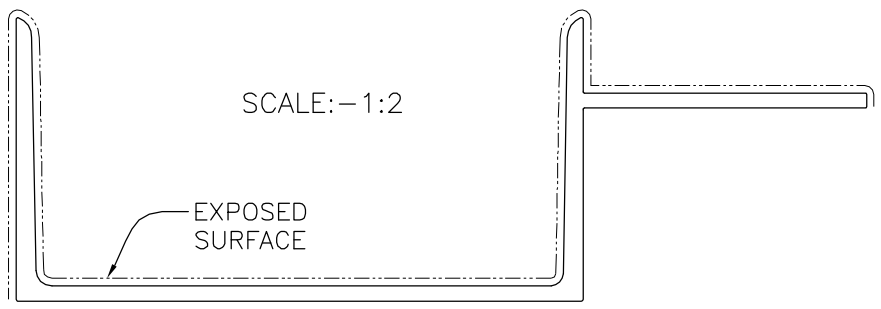

JINDAL SYMBOL OF QUALITY AN ISO 9001 COMPANY	*JINDAL ALUMINIUM LTD.* *BANGALORE–560073 (INDIA)*		NAME	DATE
		DRAWN	J.P.KAUSHIK	03–04–2019
		CHECKED		
		APPROVED	*B.NATARAJA*	19–04–2019
1. ALL DIMENSIONS ARE IN mm. 2. ROUND OFF ALL SHARP CORNERS WITH 0.40 mm. 3. TOLERANCES WILL BE AS PER IS:3965–1981 , UNLESS OTHERWISE SPECIFIED		SCALE		1:1
		AREA mm^2		1555.05
		PERIMETER mm.		731.009
		WEIGHT kg/m		4.199
PARTY'S NAME	KAMLESH B JHALA, PUNE	DRAWING No.		SECTION No.
PARTY'S DRAWING No.	AS PER DRAWING	P–19373		–
ALLOY & TEMPER	HE9 WP	S6213		S6213
DESCRIPTION	MISC. CHANNEL			