P–19224

S6216

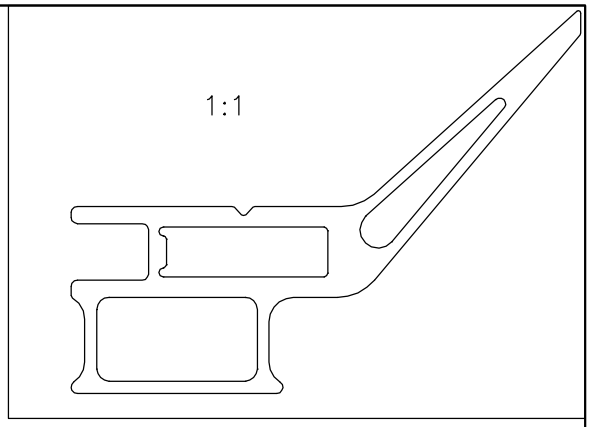

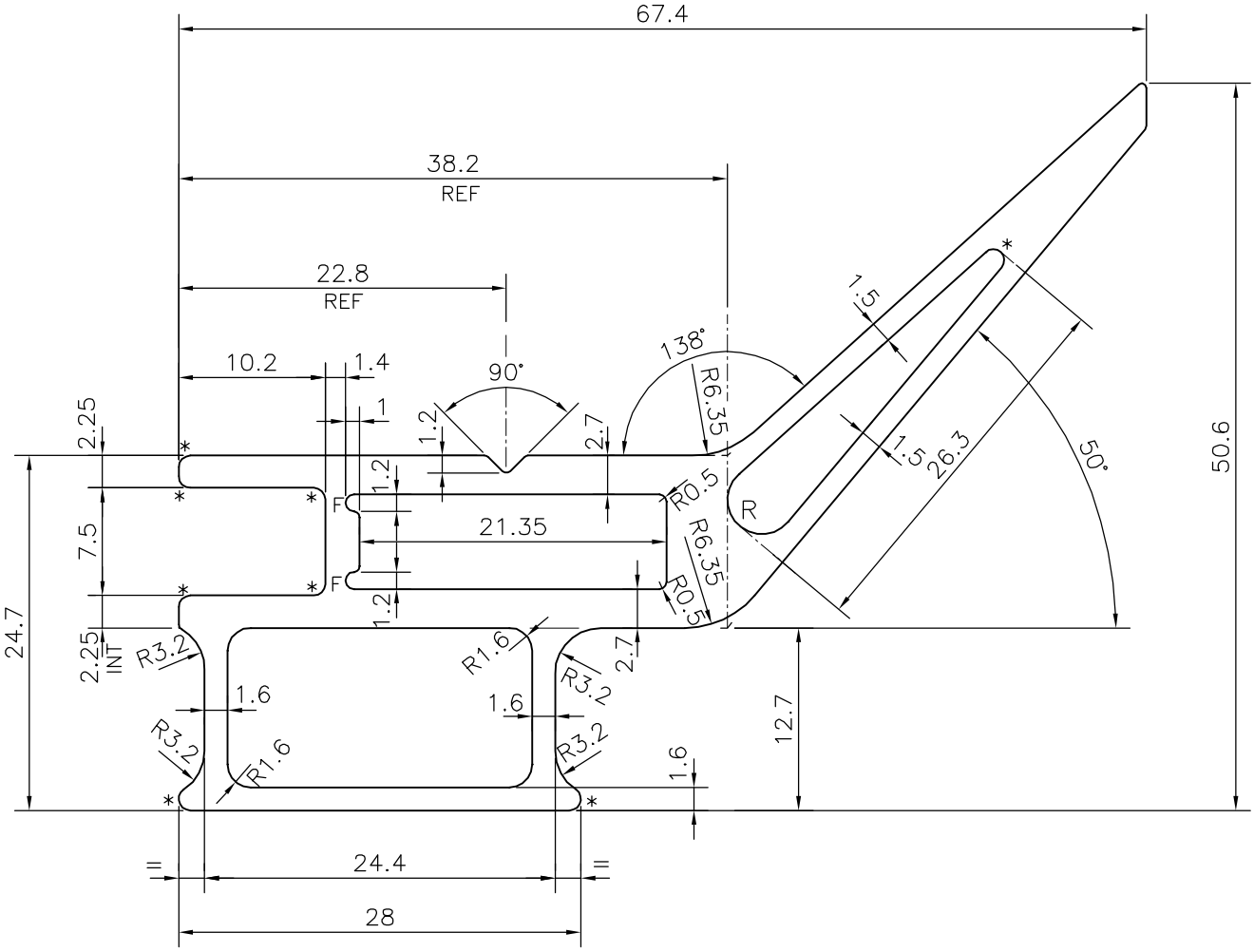

R = BLEND RADIUS

F = FULL RADIUS (2 PLACES)

* = 0.80 RADIUS (8 PLACES)

SYMBOL OF QUALITY
AN ISO 9001 COMPANY

JINDAL ALUMINIUM LTD.

BANGALORE–560073 (INDIA)

	NAME	DATE
DRAWN	J.P.KAUSHIK	02–03–2019
CHECKED		
APPROVED	*B.NATARAJA*	23–04–2019

1. ALL DIMENSIONS ARE IN mm.
2. ROUND OFF ALL SHARP CORNERS WITH 0.40 mm.
3. TOLERANCES WILL BE AS PER IS:6477–1983 , UNLESS OTHERWISE SPECIFIED

SCALE	2:1
AREA mm^2	466.377
PERIMETER mm.	221.938
WEIGHT kg/m	1.259

PARTY'S NAME	KEWAUNEE SCIENTIFIC CORPORATION INDIA PVT. LTD., BANGALORE
PARTY'S DRAWING No.	AS PER DRAWING
ALLOY & TEMPER	6063 T6
DESCRIPTION	MISC. SECTION

DRAWING No.	SECTION No.
P–19224	–
S6216	S6216