P-19302-1
S6262

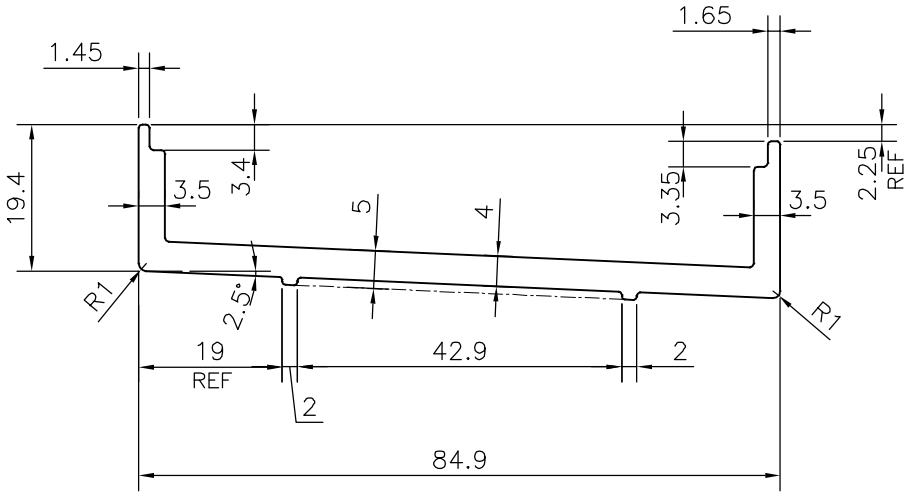

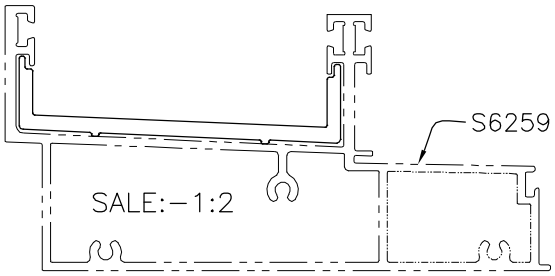

TOLERANCES ON OVERALL WIDTHS & WIDTHS ACROSS FLATS OF BARS, & REGULAR SECTIONS

UPTO 6.40mm - ±0.20	UPTO 32.0mm - ±0.38	UPTO 120.0mm - ±0.85	1. STRAIGHTNESS=1.7mm/M
UPTO 10.0mm - ±0.23	UPTO 50.0mm - ±0.46	UPTO 160.0mm - ±1.02	2. TWIST=1.7mm/M
UPTO 12.0mm - ±0.25	UPTO 60.0mm - ±0.53	UPTO 200.0mm - ±1.14	3. ANGULARITY= ±2°
UPTO 16.0mm - ±0.28	UPTO 80.0mm - ±0.69	UPTO 250.0mm - ±1.40	4. FLATNESS =0.007xWIDTH
UPTO 25.0mm - ±0.30	UPTO 100.0mm - ±0.75	UPTO 300.0mm - ±1.65	

JINDAL

SYMBOL OF QUALITY
AN ISO 9001 COMPANY

JINDAL ALUMINIUM LTD.

BANGALORE-560073 (INDIA)

	NAME	DATE
DRAWN	J.P.KAUSHIK	23-03-2019
CHECKED		
APPROVED	B.NATARAJA	25-05-2019

1. ALL DIMENSIONS ARE IN mm.
2. ROUND OFF ALL SHARP CORNERS WITH 0.40 mm.
3. TOLERANCES WILL BE AS PER IS:3965-1981 , UNLESS OTHERWISE SPECIFIED

SCALE	1:1
AREA mm^2	442.834
PERIMETER mm.	241.99
WEIGHT kg/m	1.196

PARTY'S NAME	GENERAL CATEGORY
PARTY'S DRAWING No.	AS PER DRAWING
ALLOY & TEMPER	6063 T6
DESCRIPTION	SPLIE PLATE SECTION

DRAWING No.	SECTION No.
P-19302-1	-
S6262	S6262