P−18121−2
S6268

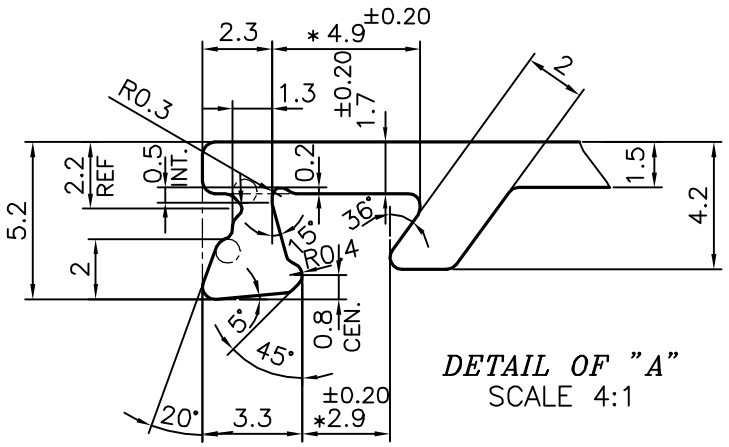

DETAIL OF "A"
SCALE 4:1

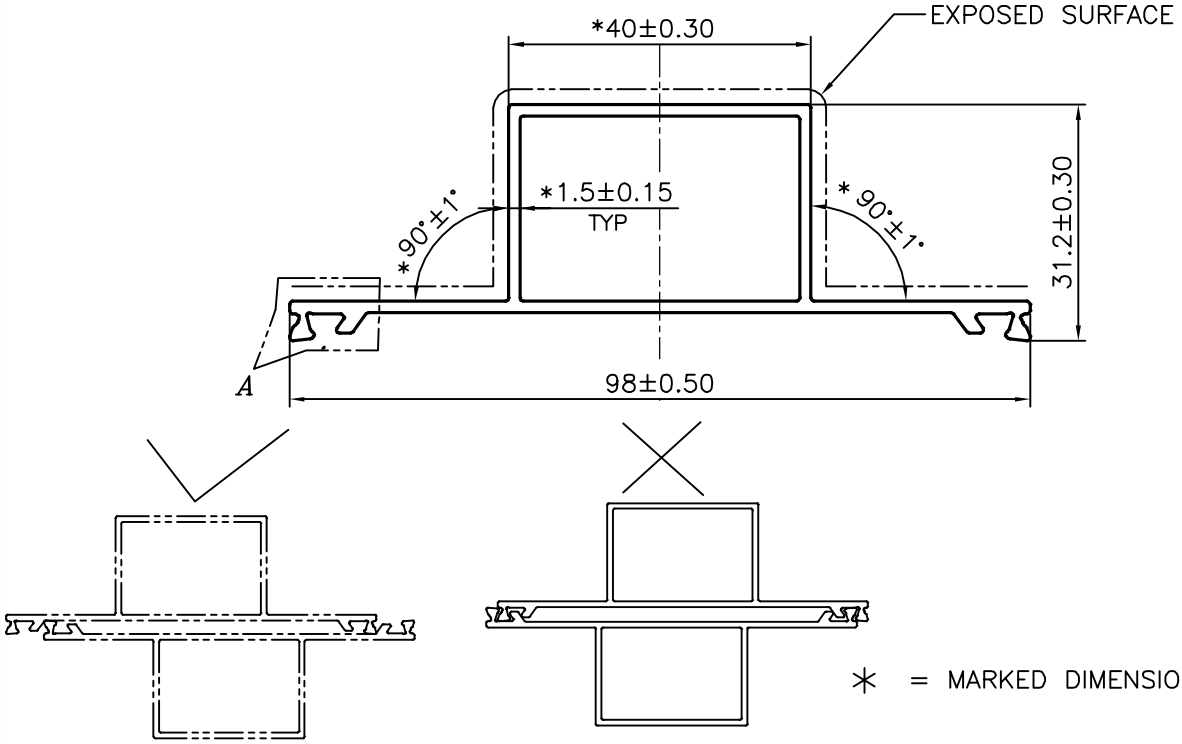

✳ = MARKED DIMENSIONS ARE CRITICAL

TOLERANCES ON OVERALL WIDTHS & WIDTHS ACROSS FLATS OF BARS, & REGULAR SECTIONS			
UPTO 6.40mm − ±0.20	UPTO 32.0mm − ±0.38	UPTO 120.0mm − ±0.85	UPTO 320.00mm − ±1.70
UPTO 10.0mm − ±0.23	UPTO 50.0mm − ±0.46	UPTO 160.0mm − ±1.02	
UPTO 12.0mm − ±0.25	UPTO 60.0mm − ±0.53	UPTO 200.0mm − ±1.14	
UPTO 16.0mm − ±0.28	UPTO 80.0mm − ±0.69	UPTO 250.0mm − ±1.40	
UPTO 25.0mm − ±0.30	UPTO 100.0mm − ±0.75	UPTO 300.0mm − ±1.65	

JINDAL
SYMBOL OF QUALITY
AN ISO 9001 COMPANY

JINDAL ALUMINIUM LTD.
BANGALORE−560073 (INDIA)

	NAME	DATE
DRAWN	J.P.KAUSHIK	04−05−2019
CHECKED		
APPROVED	B.NATARAJA	01−06−2019

1. ALL DIMENSIONS ARE IN mm.
2. ROUND OFF ALL SHARP CORNERS WITH 0.40 mm.
3. TOLERANCES WILL BE AS PER IS:6477−1983, UNLESS OTHERWISE SPECIFIED

SCALE	1:1
AREA mm^2	311.227
PERIMETER mm.	278.083
WEIGHT kg/m	0.840

PARTY'S NAME	VIVANT SOLUTION PVT. LTD., CHENNAI
PARTY'S DRAWING No.	VS250−250
ALLOY & TEMPER	6063 T6
DESCRIPTION	AIR GRILL SECTION

DRAWING No.	SECTION No.
P−18121−2	−
S6268	S6268