P−18122−2
S6269

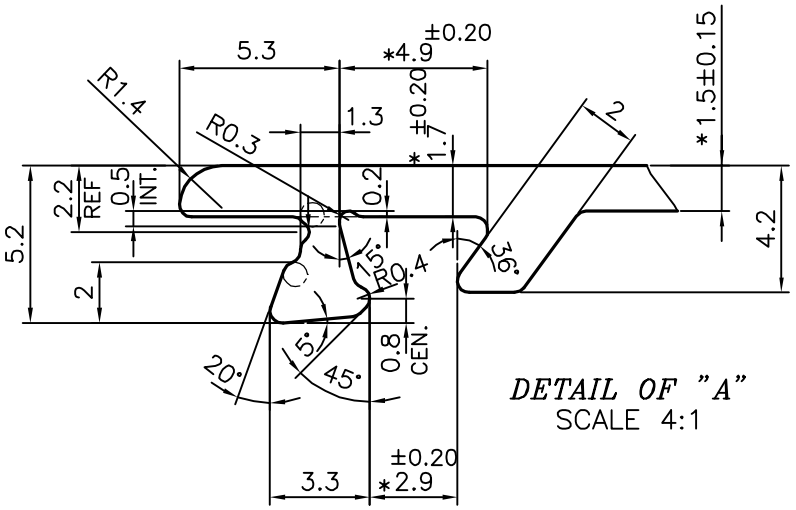

DETAIL OF "A"
SCALE 4:1

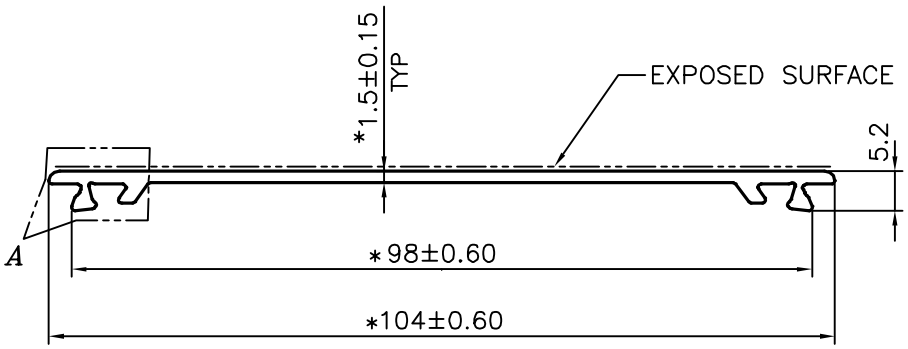

1. STRAIGHTNESS=1.7mm/M
2. TWIST=1.7mm/M
3. ANGULARITY= ±1°
4. FLATNESS =0.006xWIDTH

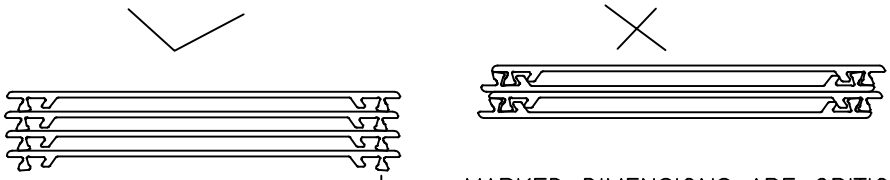

* = MARKED DIMENSIONS ARE CRITICAL

TOLERANCES ON OVERALL WIDTHS & WIDTHS ACROSS FLATS OF BARS, & REGULAR SECTIONS

UPTO 6.40mm − ±0.20	UPTO 32.0mm − ±0.38	UPTO 120.0mm − ±0.85	UPTO 320.00mm − ±1.70
UPTO 10.0mm − ±0.23	UPTO 50.0mm − ±0.46	UPTO 160.0mm − ±1.02	
UPTO 12.0mm − ±0.25	UPTO 60.0mm − ±0.53	UPTO 200.0mm − ±1.14	
UPTO 16.0mm − ±0.28	UPTO 80.0mm − ±0.69	UPTO 250.0mm − ±1.40	
UPTO 25.0mm − ±0.30	UPTO 100.0mm − ±0.75	UPTO 300.0mm − ±1.65	

JINDAL
SYMBOL OF QUALITY
AN ISO 9001 COMPANY

JINDAL ALUMINIUM LTD.
BANGALORE−560073 (INDIA)

	NAME	DATE
DRAWN	J.P.KAUSHIK	04−05−2019
CHECKED		
APPROVED	B.NATARAJA	01−06−2019

1. ALL DIMENSIONS ARE IN mm.
2. ROUND OFF ALL SHARP CORNERS WITH 0.40 mm.
3. TOLERANCES WILL BE AS PER IS:3965−1981, UNLESS OTHERWISE SPECIFIED

SCALE	1:1
AREA mm^2	187.03
PERIMETER mm.	237.921
WEIGHT kg/m	0.505

PARTY'S NAME	VIVANT SOLUTION PVT. LTD., CHENNAI
PARTY'S DRAWING No.	VS250−251
ALLOY & TEMPER	6063 T6
DESCRIPTION	AIR GRILL SECTION

DRAWING No.	SECTION No.
P−18122−2	−
S6269	S6269