P-19436
S6308

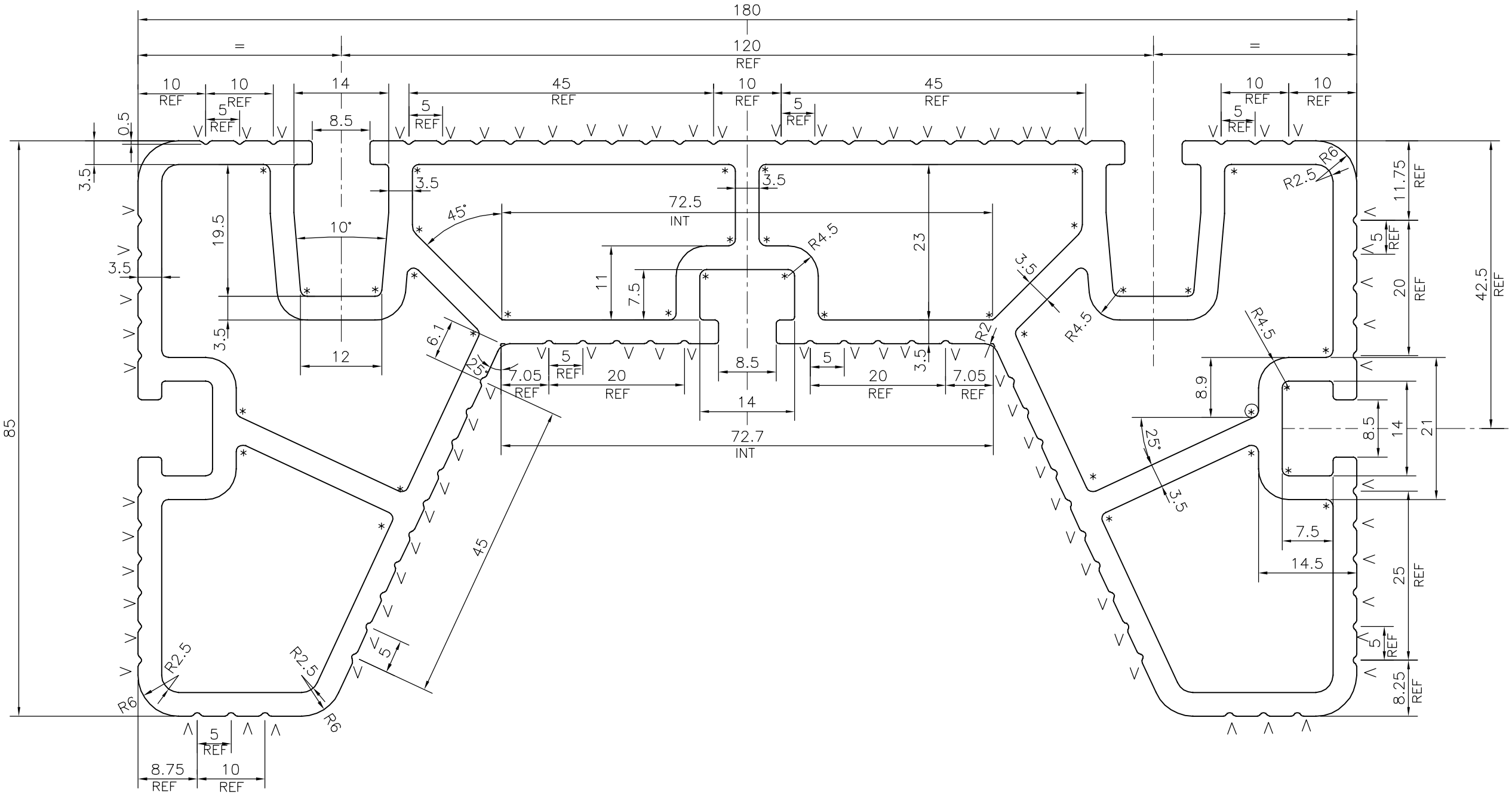

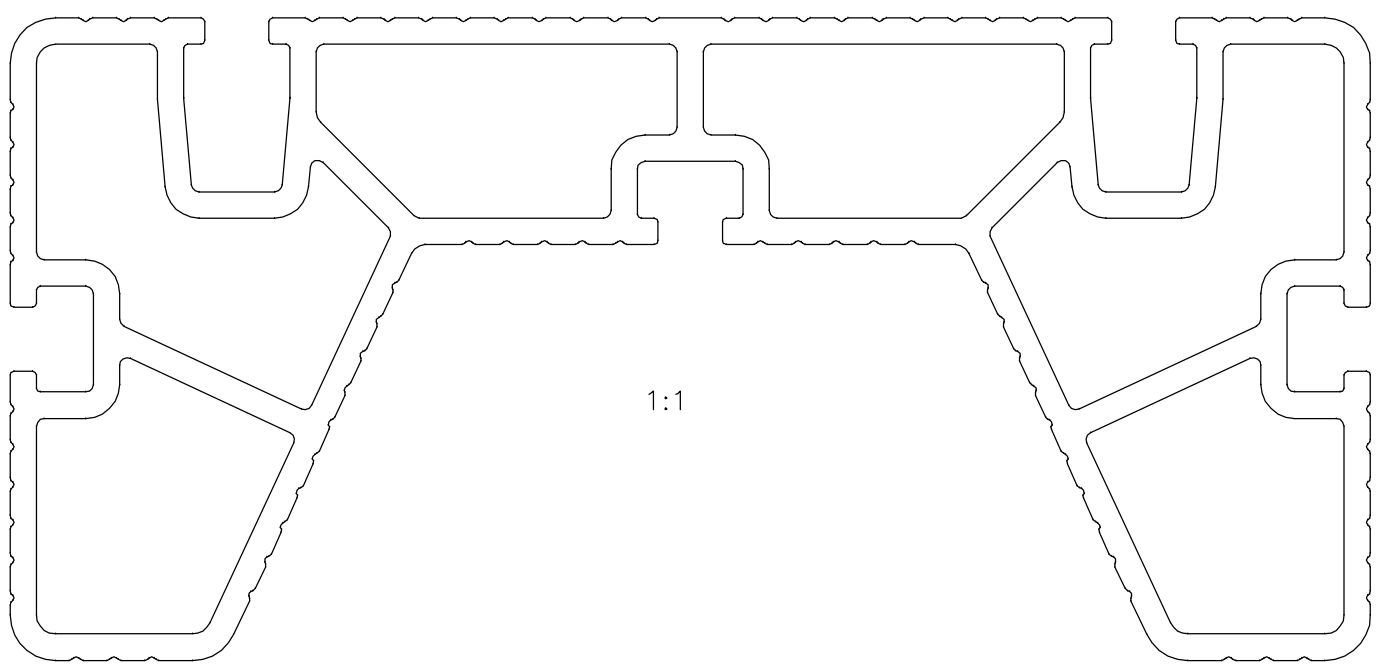

V = V GROOVE 0.5x90° (84 PLACES)
* = 1.0 RADIUS (36 PLACES)

SYMBOL OF QUALITY
AN ISO 9001 COMPANY

JINDAL ALUMINIUM LTD.

BANGALORE-560073 (INDIA)

1. ALL DIMENSIONS ARE IN mm.
2. ROUND OFF ALL SHARP CORNERS WITH 0.40 mm.
3. TOLERANCES WILL BE AS PER IS:6477-1983 , UNLESS OTHERWISE SPECIFIED

	NAME	DATE
DRAWN	J.P.KAUSHIK	09-05-2019
CHECKED		
APPROVED	B.NATARAJA	24-06-2019

SCALE	1.5:1
AREA mm^2	2930.061
PERIMETER mm.	813.552
WEIGHT kg/m	7.911

DRAWING No.	SECTION No.
P-19436	–
S6308	S6308

PARTY'S NAME	ATS ELGI LTD., COIMBATORE
PARTY'S DRAWING No.	AS PER DRAWING
ALLOY & TEMPER	6063 T6
DESCRIPTION	MISC. SECTION