P-19508
S6327

1:1

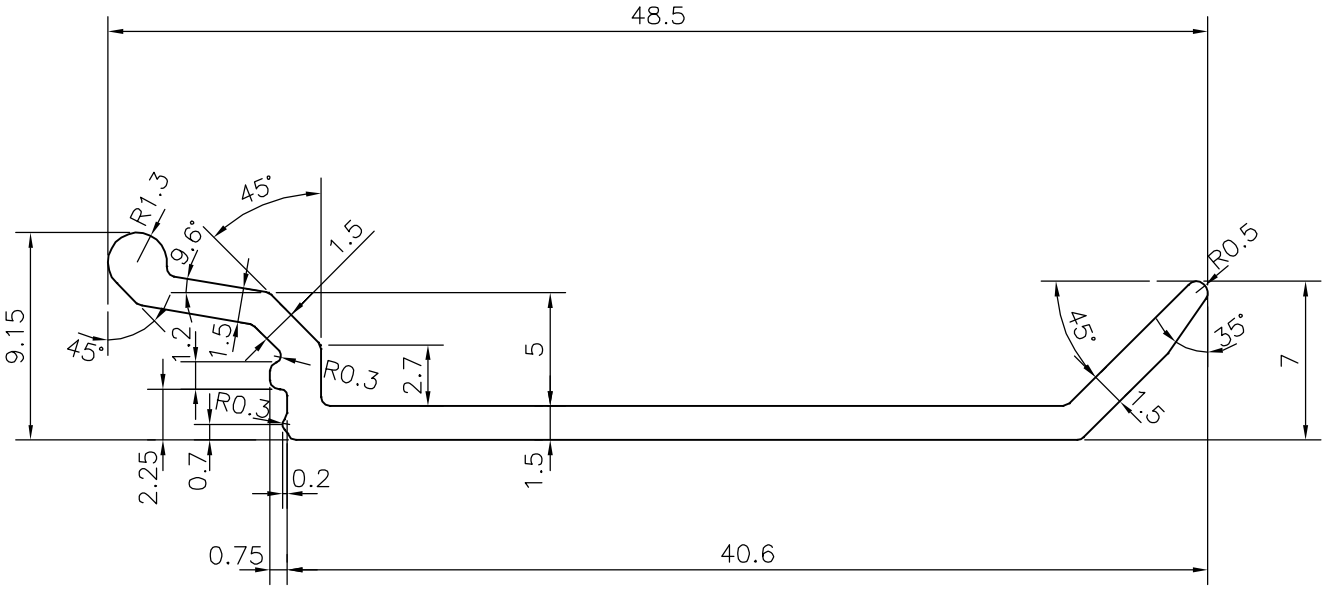

JINDAL SYMBOL OF QUALITY AN ISO 9001 COMPANY	*JINDAL ALUMINIUM LTD.* *BANGALORE-560073 (INDIA)*		NAME	DATE
		DRAWN	J.P.KAUSHIK	06-05-2019
		CHECKED		
		APPROVED	*B.NATARAJA*	01-07-2019
1. ALL DIMENSIONS ARE IN mm. 2. ROUND OFF ALL SHARP CORNERS WITH 0.40 mm. 3. TOLERANCES WILL BE AS PER IS:3965-1981 , UNLESS OTHERWISE SPECIFIED		SCALE		3:1
		AREA mm^2		85.314
		PERIMETER mm.		113.844
		WEIGHT kg/m		0.230
PARTY'S NAME	ATS SAVVY DEVELOPERS LLP, AHMEDABAD	DRAWING No.		SECTION No.
PARTY'S DRAWING No.	AS PER DRAWING	P-19508		–
ALLOY & TEMPER	6063 T6	S6327		S6327
DESCRIPTION	CURTAIN WALL SECTION			