P−19622
S6346

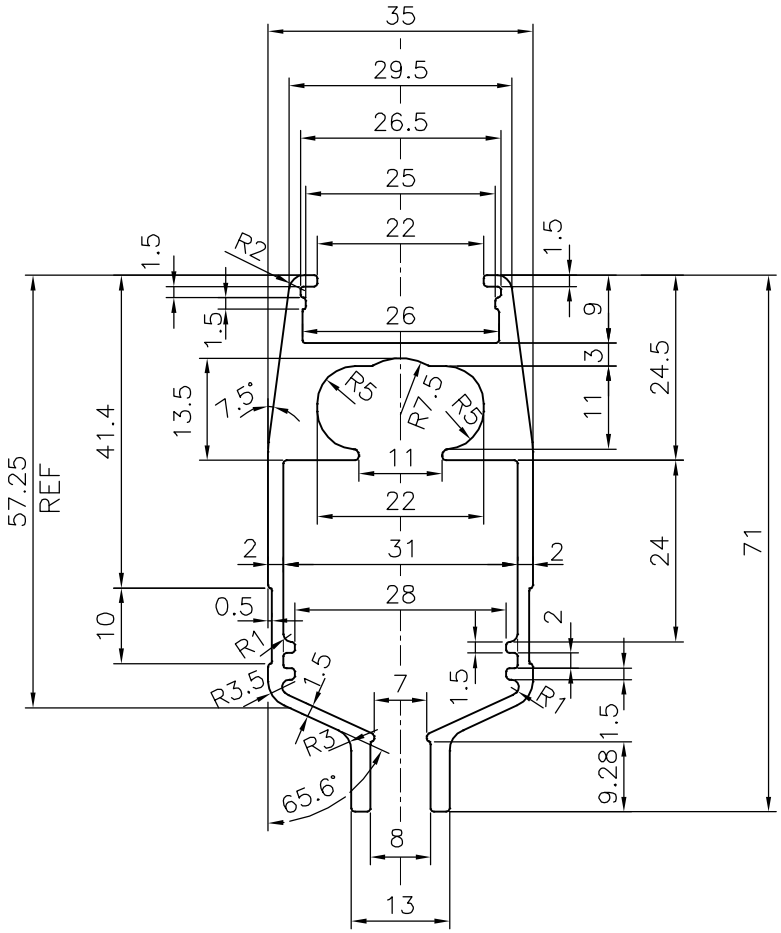

JINDAL SYMBOL OF QUALITY AN ISO 9001 COMPANY	*JINDAL ALUMINIUM LTD.* *BANGALORE−560073 (INDIA)*		NAME	DATE
		DRAWN	J.P.KAUSHIK	05−06−2019
		CHECKED		
		APPROVED	*B.NATARAJA*	06−07−2019
1. ALL DIMENSIONS ARE IN mm. 2. ROUND OFF ALL SHARP CORNERS WITH 0.40 mm. 3. TOLERANCES WILL BE AS PER IS:3965−1981 , UNLESS OTHERWISE SPECIFIED		SCALE		1:1
		AREA mm^2		530.934
		PERIMETER mm.		399.277
		WEIGHT kg/m		1.434
PARTY'S NAME	SUNLUX TECHNOVATIONS PVT. LTD., BANGALORE	DRAWING No.		SECTION No.
PARTY'S DRAWING No.	SLX−L01H2−DR−MP−061 REV. 01	P−19622		−
ALLOY & TEMPER	6063 T6	S6346		S6346
DESCRIPTION	MISC. SECTION			