P−19232−1	
S6359	

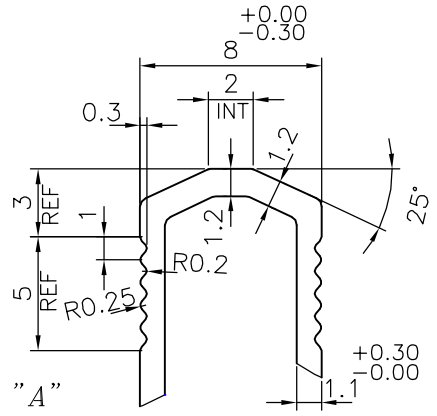

DETAIL OF "A"
SCALE 3:1

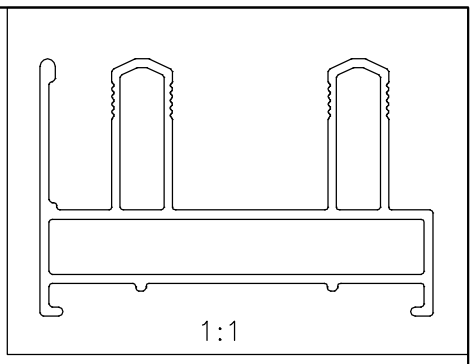

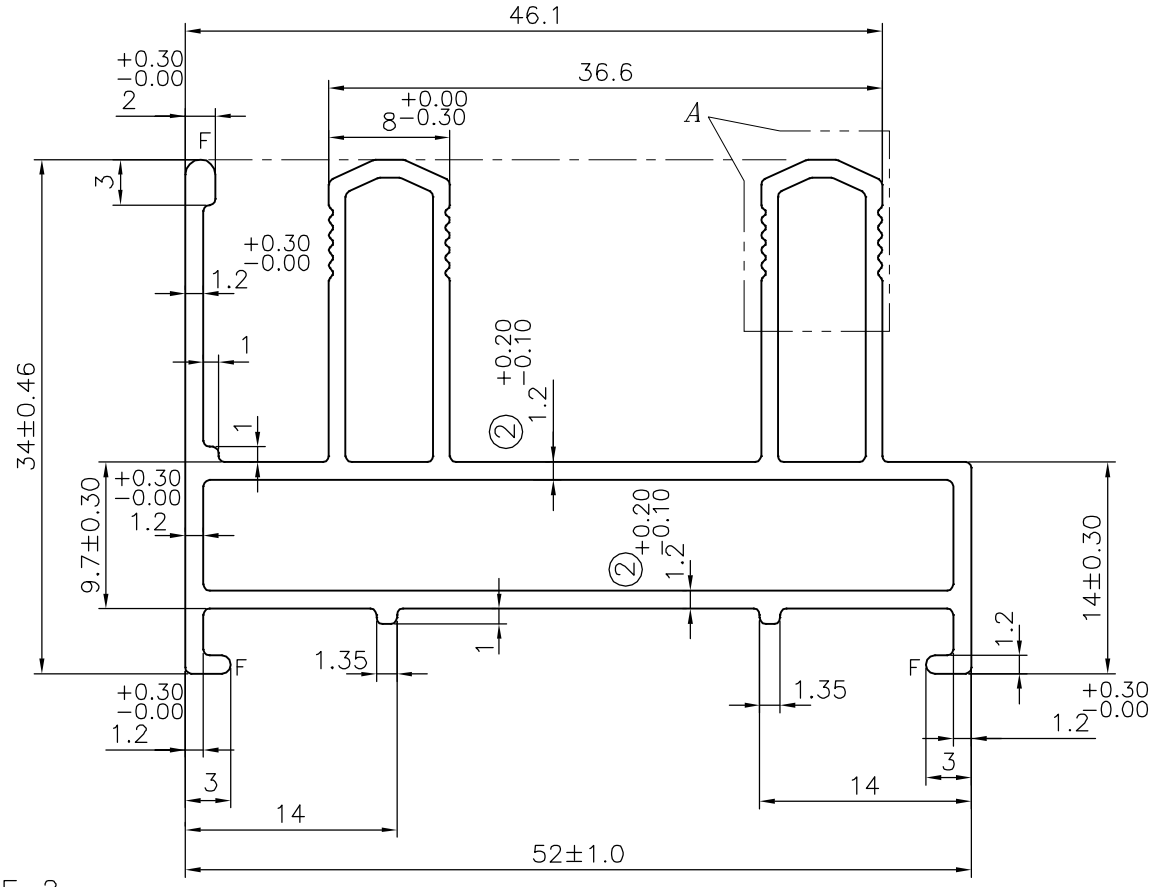

ISSUE−2

THICKNESS & TOLERANCE CHANGED FROM 1.30 $^{+0.30}_{-0.00}$ mm TO 1.20 $^{+0.20}_{-0.10}$ mm

WEIGHT CHANGED FROM 0.774 TO 0.761 kg/m

F = FULL RADIUS (3 PLACES)

TOLERANCES ON OVERALL DIMENSIONS OF HOLLOW SECTIONS

UPTO 20.0mm − ±0.30	UPTO 80.0mm − ±0.70	UPTO 180.0mm − ±1.27	1. STRAIGHTNESS=1.7mm/M
UPTO 30.0mm − ±0.38	UPTO 100.0mm − ±0.80	UPTO 200.0mm − ±1.40	2. TWIST=1.7mm/M
UPTO 40.0mm − ±0.45	UPTO 120.0mm − ±0.90	UPTO 225.0mm − ±1.52	3. ANGULARITY= ±2°
UPTO 50.0mm − ±0.52	UPTO 140.0mm − ±1.00		4. FLATNESS =0.006xWIDTH
UPTO 60.0mm − ±0.60	UPTO 160.0mm − ±1.14		

JINDAL
SYMBOL OF QUALITY
AN ISO 9001 COMPANY

JINDAL ALUMINIUM LTD.

BANGALORE−560073 (INDIA)

	NAME	DATE
DRAWN	J.P.KAUSHIK	11−09−2019
CHECKED		
APPROVED	B.NATARAJA	17−09−2019

1. ALL DIMENSIONS ARE IN mm.
2. ROUND OFF ALL SHARP CORNERS WITH 0.40 mm.
3. TOLERANCES WILL BE AS PER IS:6477−1983 UNLESS OTHERWISE SPECIFIED

SCALE	2:1
AREA mm^2	281.806
PERIMETER mm.	266.845
WEIGHT kg/m	0.761

PARTY'S NAME	PARAMOUNT INDUSTRIES, BANGALORE
PARTY'S DRAWING No.	P−AL1724−25LWA
ALLOY & TEMPER	6063 T6
DESCRIPTION	WINDOW SECTION

DRAWING No.	SECTION No.
P−19232−1	−
S6359	S6359(ISSUE−2)