P-19781

S6386

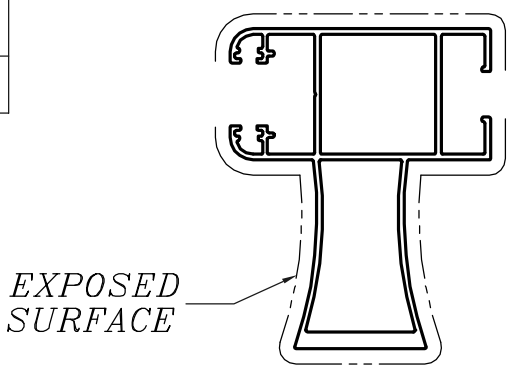


SCALE 1:2

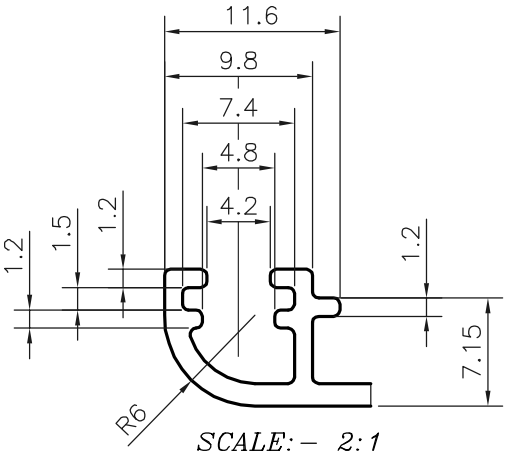


SCALE:- 2:1

DETAIL OF "A"

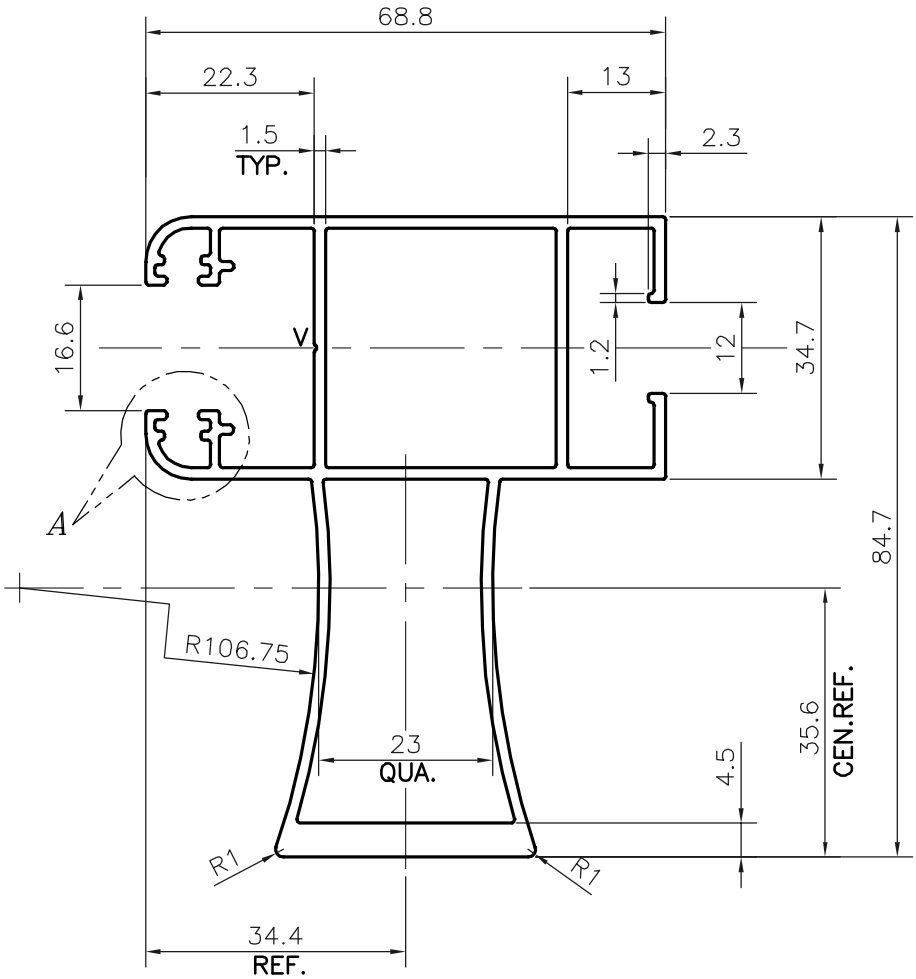


V = "V" GROOVE 0.3x90° (1 PLACE)

| | | | NAME | DATE |
|---|---|---|---|---|
| SYMBOL OF QUALITY AN ISO 9001 COMPANY | JINDAL ALUMINIUM LTD. BANGALORE-560073 (INDIA) | DRAWN | DARPAN | 05-07-2019 |
| | | CHECKED | | |
| | | APPROVED | B.NATARAJA | 06-08-2019 |

1. ALL DIMENSIONS ARE IN mm.
2. ROUND OFF ALL SHARP CORNERS WITH 0.40 mm.
3. TOLERANCES WILL BE AS PER IS:6477-1983 , UNLESS OTHERWISE SPECIFIED

| | |
|---|---|
| SCALE | 1:1 |
| AREA $mm^2$ | 671.767 |
| PERIMETER mm. | 499.976 |
| WEIGHT kg/m | 1.814 |

| | | DRAWING No. | SECTION No. |
|---|---|---|---|
| PARTY'S NAME | CITY CORPORATION LIMITED, PUNE | | |
| PARTY'S DRAWING No. | AS PER AUTOCAD DRAWING | P-19781 | - |
| ALLOY & TEMPER | 6063 T6 | S6386 | S6386 |
| DESCRIPTION | WINDOW SECTION-VERTICAL HANDLE | | |