P-19756-1
S6394

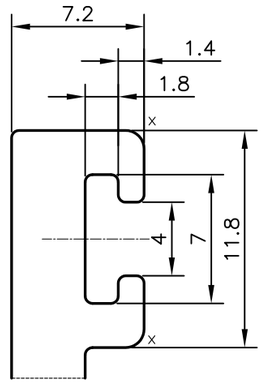

DETAIL OF "A"
SCALE 3:1

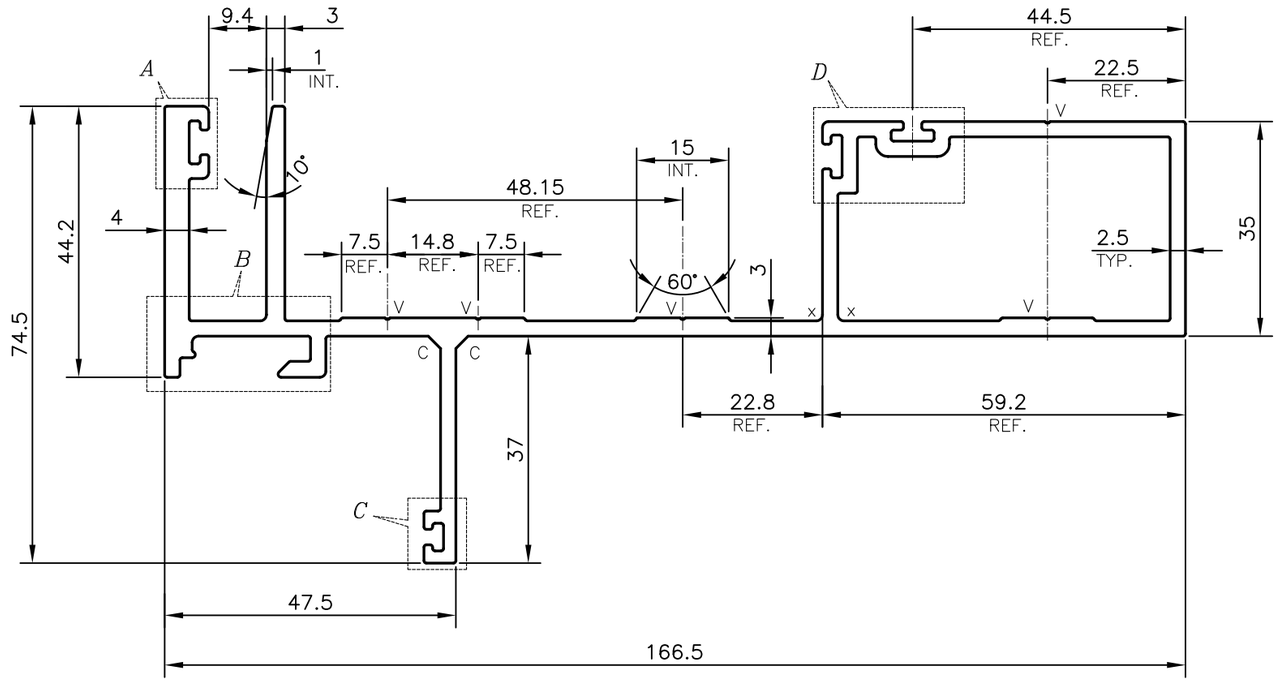

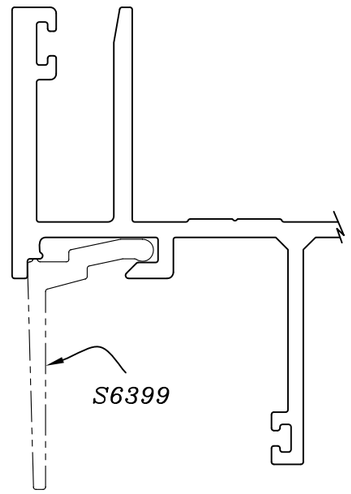

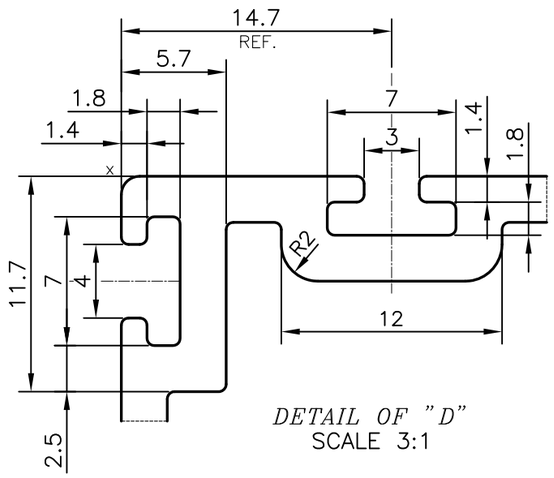

DETAIL OF "D"
SCALE 3:1

C = CHAMFER 2x45° (2 PLACES)
X = RADIUS 1 mm. (6 PLACES)
V = VEE GROOVE 0.3x90° (5 PLACES)

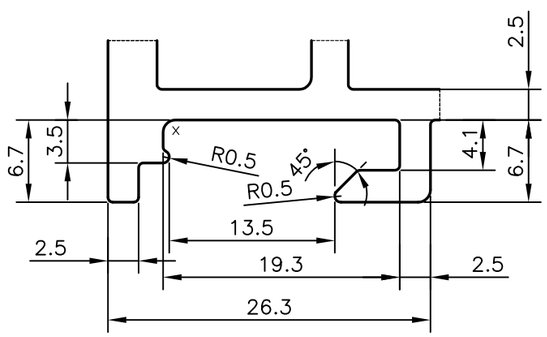

DETAIL OF "B"
SCALE 2:1

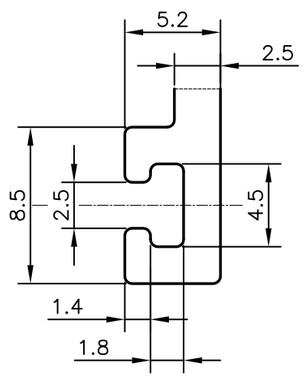

DETAIL OF "C"
SCALE 2:1

TOLERANCES ON OVERALL WIDTHS & WIDTHS ACROSS FLATS OF BARS, & REGULAR SECTIONS

UPTO 6.40mm – ±0.20	UPTO 32.0mm – ±0.38	UPTO 120.0mm – ±0.85
UPTO 10.0mm – ±0.23	UPTO 50.0mm – ±0.46	UPTO 160.0mm – ±1.02
UPTO 12.0mm – ±0.25	UPTO 60.0mm – ±0.53	UPTO 200.0mm – ±1.14
UPTO 16.0mm – ±0.28	UPTO 80.0mm – ±0.69	UPTO 250.0mm – ±1.40
UPTO 25.0mm – ±0.30	UPTO 100.0mm – ±0.75	UPTO 300.0mm – ±1.65

1. STRAIGHTNESS=1.7 mm/M
2. TWIST=1.7 mm/M
3. ANGULARITY= ±2°
4. FLATNESS =0.007xWIDTH

JINDAL
SYMBOL OF QUALITY
AN ISO 9001 COMPANY

JINDAL ALUMINIUM LTD.
BANGALORE-560073 (INDIA)

1. ALL DIMENSIONS ARE IN mm.
2. ROUND OFF ALL SHARP CORNERS WITH 0.40 mm.
3. TOLERANCES WILL BE AS PER IS:6477-1983 , UNLESS OTHERWISE SPECIFIED

		NAME	DATE
	DRAWN	PARVESH	09-07-2019
	CHECKED		
	APPROVED	B.NATARAJA	07-08-2019
	SCALE		1:1
	AREA mm^2		1197.425
	PERIMETER mm.		701.832
	WEIGHT kg/m		3.233

PARTY'S NAME	ALUPLEX INDIA PVT. LTD., MUMBAI
PARTY'S DRAWING No.	AS PER AUTOCAD DRAWING-AP-1927
ALLOY & TEMPER	6063 T6
DESCRIPTION	CURTAIN WALL SECTION-AL-04

DRAWING No.	SECTION No.
P-19756-1	–
S6394	S6394