P−19987
S6430

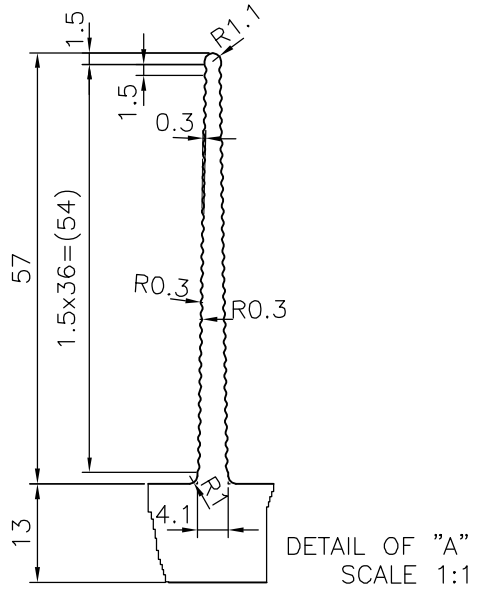

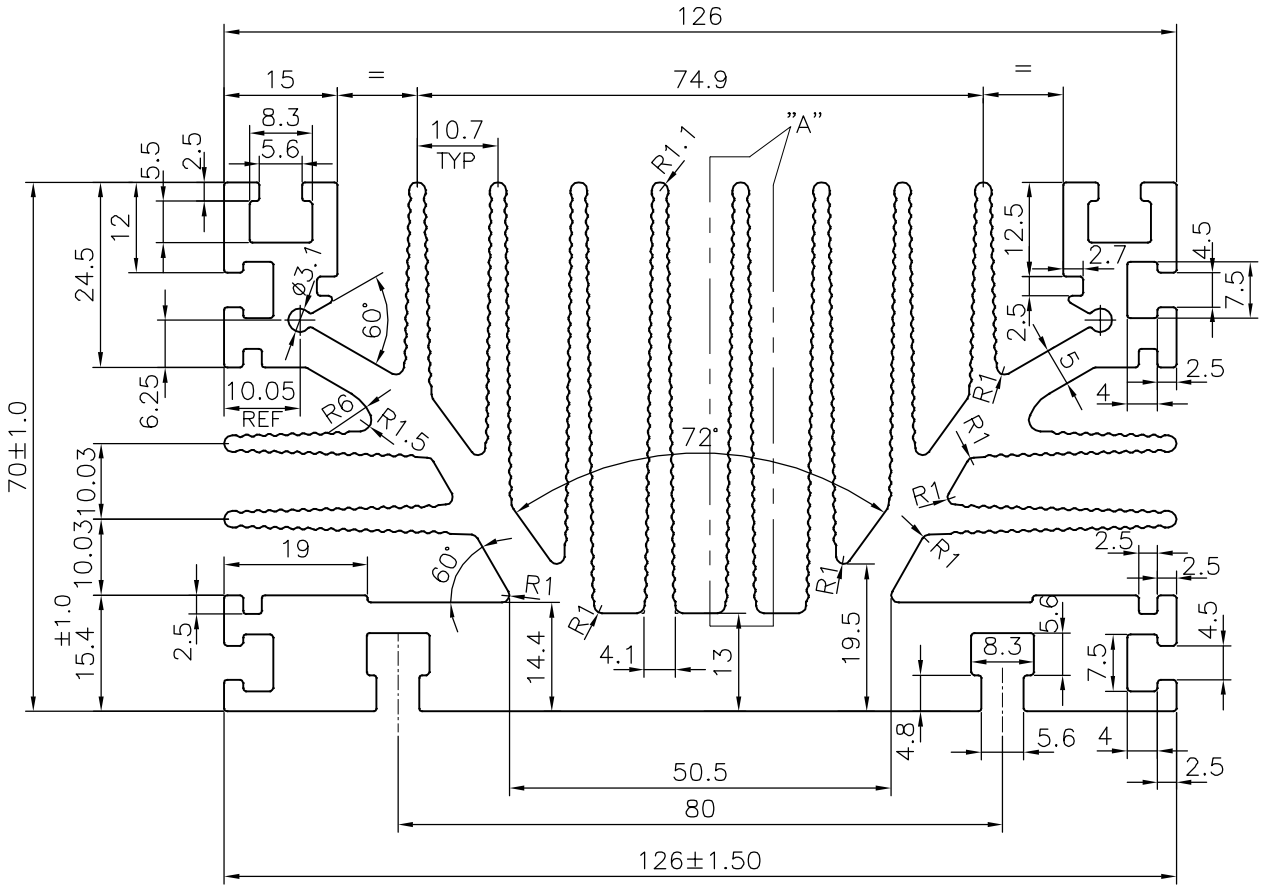

			NAME	DATE
JINDAL SYMBOL OF QUALITY AN ISO 9001 COMPANY	*JINDAL ALUMINIUM LTD.* *BANGALORE−560073 (INDIA)*	DRAWN	J.P.KAUSHIK	08−08−2019
		CHECKED		
		APPROVED	B.NATARAJA	12−08−2019

1. ALL DIMENSIONS ARE IN mm.
2. ROUND OFF ALL SHARP CORNERS WITH 0.4 mm.
3. TOLERANCES WILL BE AS PER IS:3965−1981 , UNLESS OTHERWISE SPECIFIED

SCALE	1:1
AREA mm^2	3862.04
PERIMETER mm.	1733.46
WEIGHT kg/m	10.428

PARTY'S NAME	FUJIYAMA POWER SYSTEMS PVT. LTD.,PARWANOO
PARTY'S DRAWING No.	AS PER DRAWING
ALLOY & TEMPER	6063 T6
DESCRIPTION	HEAT SINK SECTION

DRAWING No.	SECTION No.
P−19987	−
S6430	S6430