P–19912–1

S6448

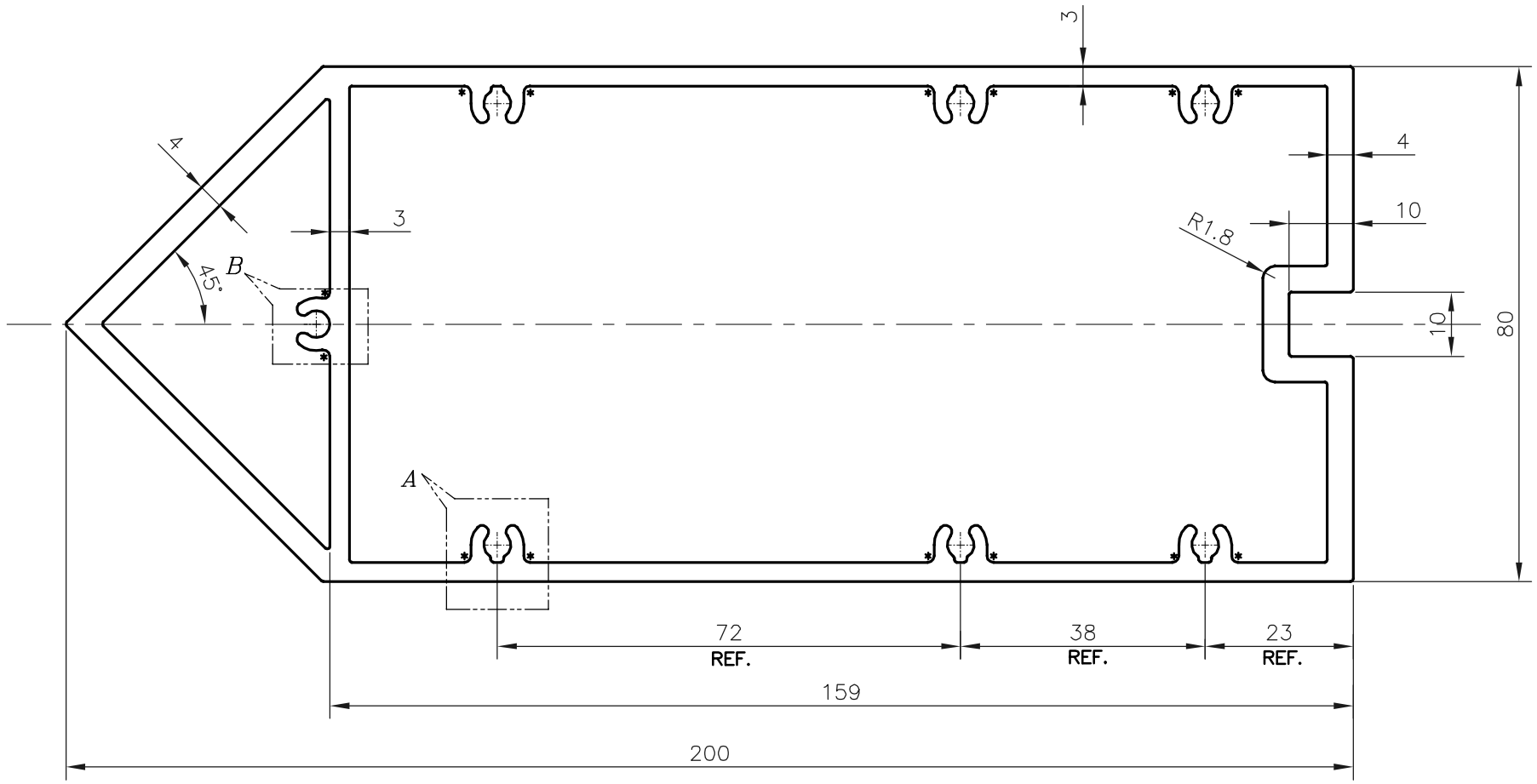

* = R1 (14 PLACES)

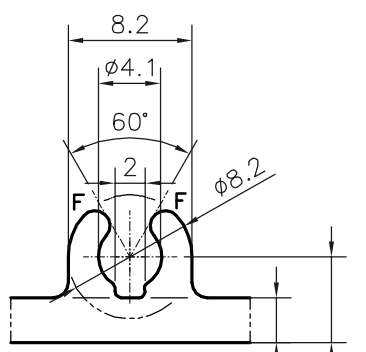

DETAIL OF "A"
SCALE 2:1

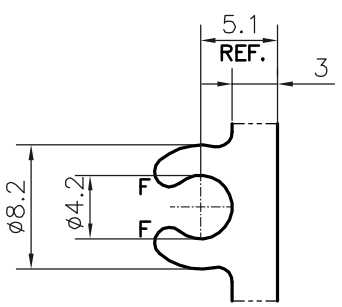

DETAIL OF "B"
SCALE 2:1

TOLERANCES ON OVERALL DIMENSIONS OF HOLLOW SECTIONS

UPTO 20.0mm – ±0.30	UPTO 80.0mm – ±0.70	UPTO 180.0mm – ±1.27	1. STRAIGHTNESS=1.7mm/M
UPTO 30.0mm – ±0.38	UPTO 100.0mm – ±0.80	UPTO 200.0mm – ±1.40	2. TWIST=1.7mm/M
UPTO 40.0mm – ±0.45	UPTO 120.0mm – ±0.90	UPTO 225.0mm – ±1.52	3. ANGULARITY= ±1°
UPTO 50.0mm – ±0.52	UPTO 140.0mm – ±1.00		4. FLATNESS =0.006xWIDTH
UPTO 60.0mm – ±0.60	UPTO 160.0mm – ±1.14		

JINDAL
SYMBOL OF QUALITY
AN ISO 9001 COMPANY

JINDAL ALUMINIUM LTD.
BANGALORE–560073 (INDIA)

1. ALL DIMENSIONS ARE IN mm.
2. ROUND OFF ALL SHARP CORNERS WITH 0.40 mm.
3. TOLERANCES WILL BE AS PER **IS:6477–1983** UNLESS OTHERWISE SPECIFIED

	NAME	DATE
DRAWN	DARPAN	02–08–2019
CHECKED		
APPROVED	B.NATARAJA	14–08–2019

SCALE	1:1
AREA mm^2	2164.428
PERIMETER mm.	532.232
WEIGHT kg/m	5.844

PARTY'S NAME	LOMA CO–DEVELOPERS 2 PRIVATE LIMITED., NAVI MUMBAI.
PARTY'S DRAWING No.	AS PER AUTOCAD DRAWING 12905
ALLOY & TEMPER	6063 T6
DESCRIPTION	CURTAIN WALL SECTION

DRAWING No.	SECTION No.
P–19912–1	–
S6448	S6448