P-20214-1

S6505

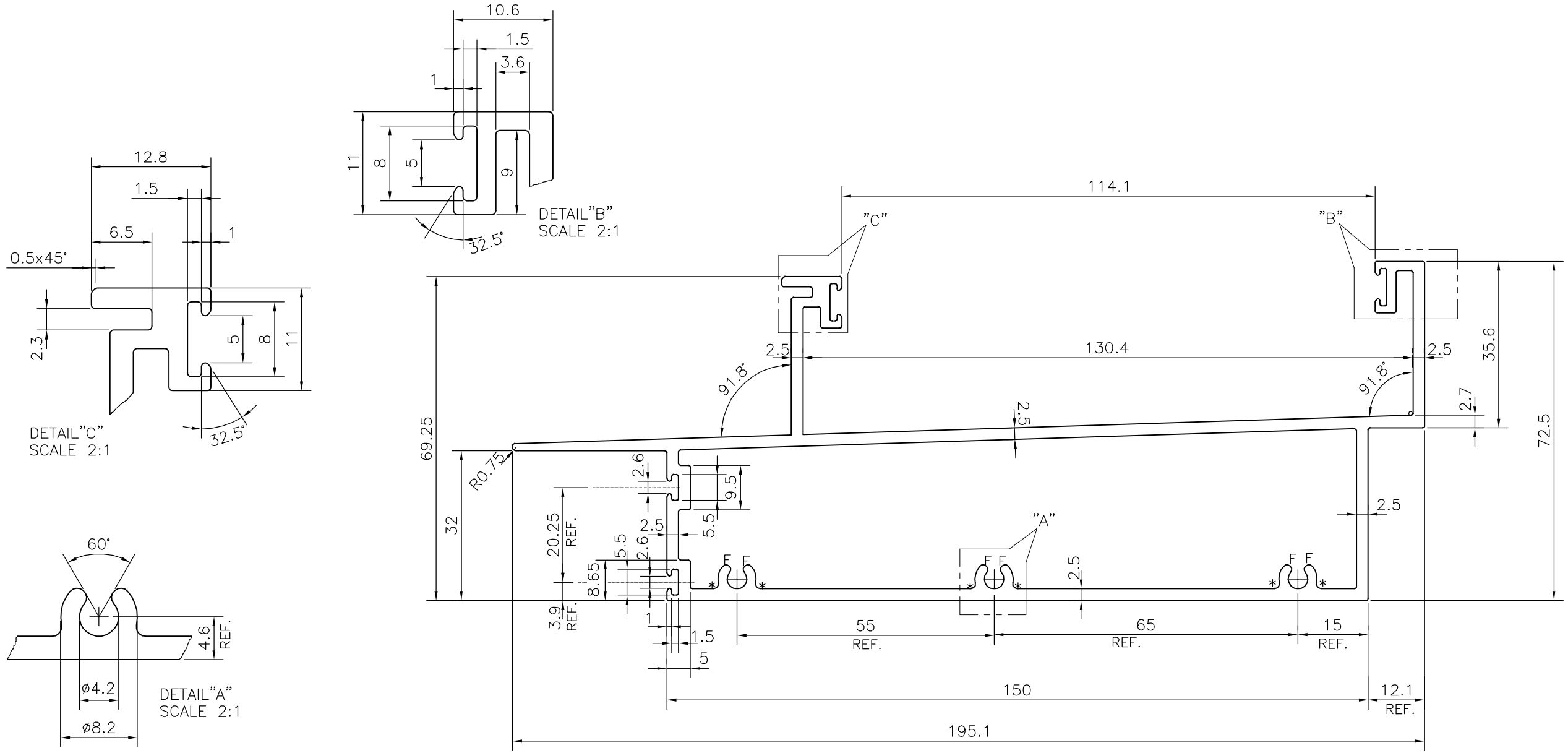


*= RADIUS 1.0 (6 PLACES )

F= FULL RADIUS (6 PLACES )

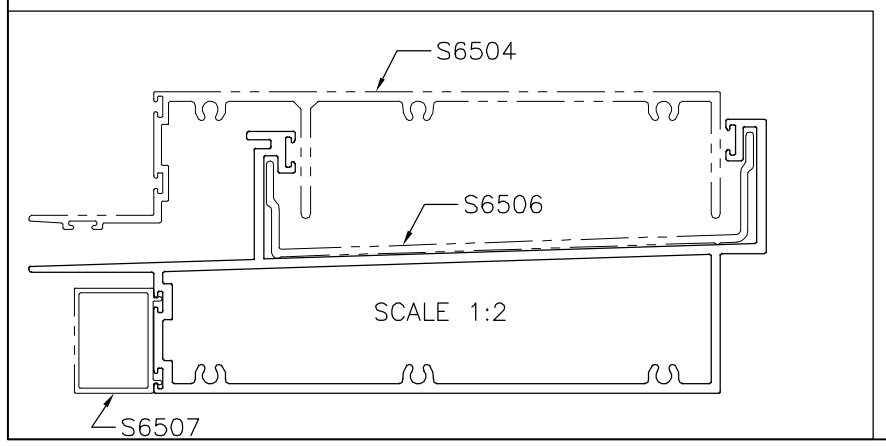


| TOLERANCES ON OVERALL DIMENSIONS OF HOLLOW SECTIONS | | | |
|---|---|---|---|
| UPTO 20.0mm – ±0.30<br>UPTO 30.0mm – ±0.38<br>UPTO 40.0mm – ±0.45<br>UPTO 50.0mm – ±0.52<br>UPTO 60.0mm – ±0.60 | UPTO 80.0mm – ±0.70<br>UPTO 100.0mm – ±0.80<br>UPTO 120.0mm – ±0.90<br>UPTO 140.0mm – ±1.00<br>UPTO 160.0mm – ±1.14 | UPTO 180.0mm – ±1.27<br>UPTO 200.0mm – ±1.40<br>UPTO 225.0mm – ±1.52 | 1. STRAIGHTNESS=1.7mm/M<br>2. TWIST=1.7mm/M<br>3. ANGULARITY= ±2°<br>4. FLATNESS =0.006xWIDTH |

JINDAL

SYMBOL OF QUALITY
AN ISO 9001 COMPANY

**JINDAL ALUMINIUM LTD.**

*BANGALORE-560073 (INDIA)*

1. ALL DIMENSIONS ARE IN mm.
2. ROUND OFF ALL SHARP CORNERS WITH 0.40 mm.
3. TOLERANCES WILL BE AS PER IS:6477-1983 UNLESS OTHERWISE SPECIFIED

| | NAME | DATE |
|---|---|---|
| DRAWN | J.P.KAUSHIK | 09-10-2019 |
| CHECKED | | |
| APPROVED | B.NATARAJA | 15-10-2019 |

| | |
|---|---|
| SCALE | 1:1 |
| AREA $mm^2$ | 1351.279 |
| PERIMETER mm. | 702.172 |
| WEIGHT kg/m | 3.648 |

| | |
|---|---|
| PARTY'S NAME | ALFA FACADE SYSTEMS PVT. LTD., PUNE |
| PARTY'S DRAWING No. | AS PER DRAWING |
| ALLOY & TEMPER | 6063 T6 |
| DESCRIPTION | CURTAIN WALL SILL SECTION |

| DRAWING No. | SECTION No. |
|---|---|
| P-20214-1 | – |
| S6505 | S6505 |