P–20176
S6511

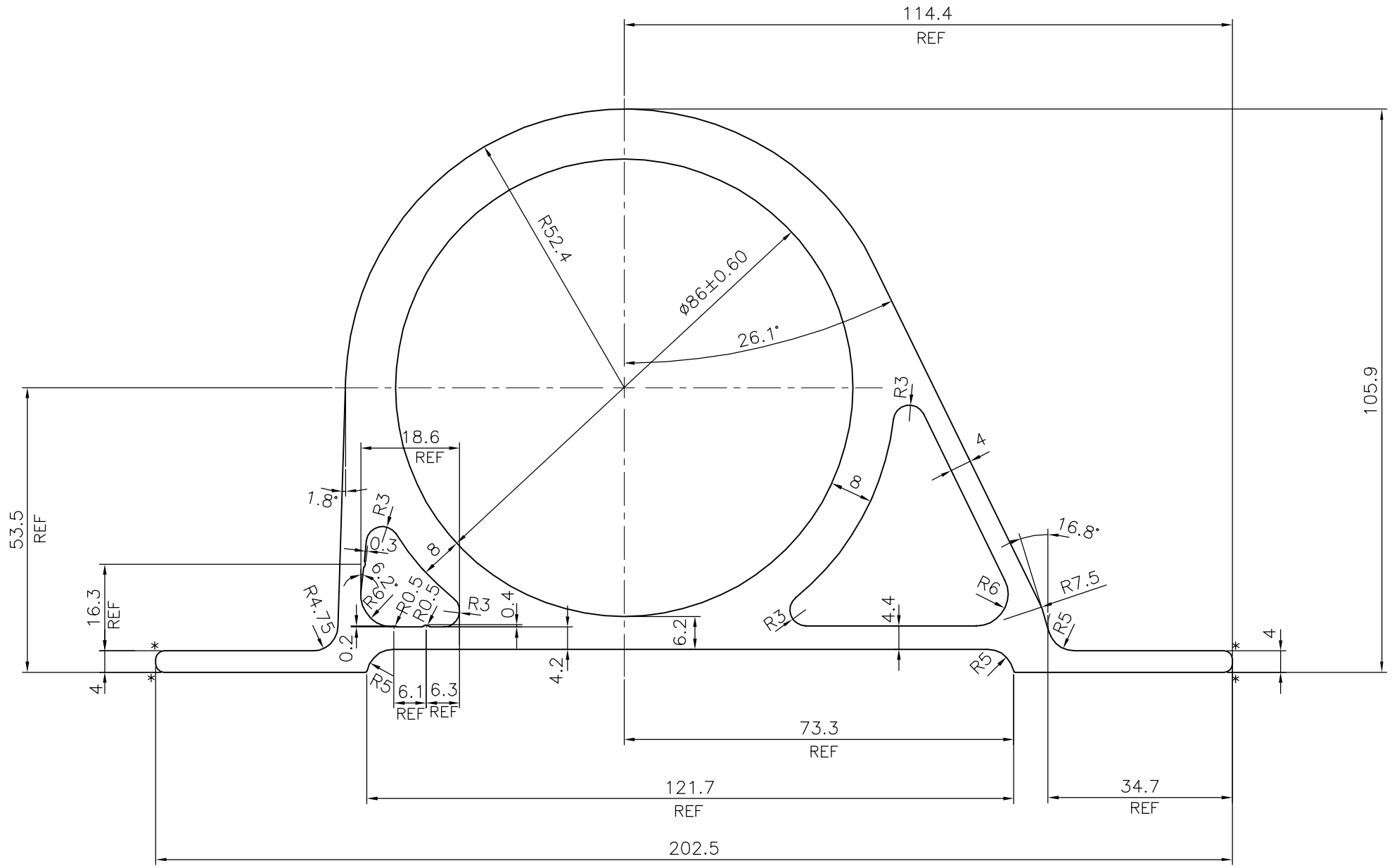

* = 1.5 RADIUS (4 PLACES)

TOLERANCES ON OVERALL DIMENSIONS OF HOLLOW SECTIONS			
UPTO 20.0mm – ±0.30 UPTO 30.0mm – ±0.38 UPTO 40.0mm – ±0.45 UPTO 50.0mm – ±0.52 UPTO 60.0mm – ±0.60	UPTO 80.0mm – ±0.70 UPTO 100.0mm – ±0.80 UPTO 120.0mm – ±0.90 UPTO 140.0mm – ±1.00 UPTO 160.0mm – ±1.14	UPTO 180.0mm – ±1.27 UPTO 200.0mm – ±1.40 UPTO 225.0mm – ±1.52	1. STRAIGHTNESS=1.7mm/M 2. TWIST=1.7mm/M 3. ANGULARITY= ±2° 4. FLATNESS =0.006xWIDTH

JINDAL
SYMBOL OF QUALITY
AN ISO 9001 COMPANY

JINDAL ALUMINIUM LTD.
BANGALORE–560073 (INDIA)

	NAME	DATE
DRAWN	J.P.KAUSHIK	26–09–2019
CHECKED		
APPROVED	B.NATARAJA	18–10–2019

1. ALL DIMENSIONS ARE IN mm.
2. ROUND OFF ALL SHARP CORNERS WITH 0.40 mm.
3. TOLERANCES WILL BE AS PER IS:6477–1983 UNLESS OTHERWISE SPECIFIED

SCALE	1:1
AREA mm^2	3829.971
PERIMETER mm.	547.171
WEIGHT kg/m	10.341

PARTY'S NAME	AVI WORLDWIDE PVT. LTD., MUMBAI
PARTY'S DRAWING No.	AVI–5917–B(EX0000379)
ALLOY & TEMPER	6063 T6
DESCRIPTION	MISC. SECTION

DRAWING No.	SECTION No.
P–20176	–
S6511	S6511