P–20177
S6512

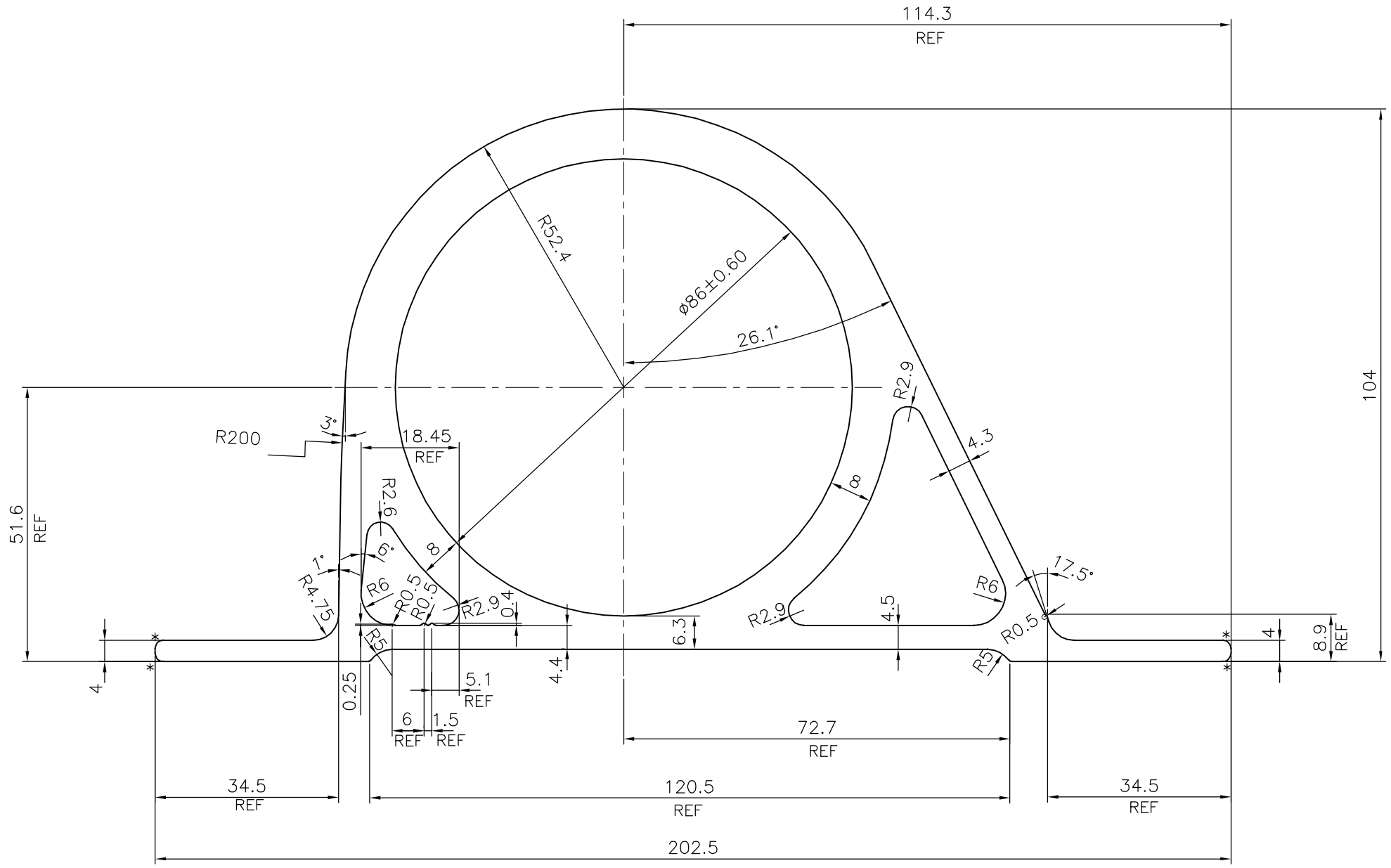

* = 1.5 RADIUS (4 PLACES)

TOLERANCES ON OVERALL DIMENSIONS OF HOLLOW SECTIONS			
UPTO 20.0mm – ±0.30 UPTO 30.0mm – ±0.38 UPTO 40.0mm – ±0.45 UPTO 50.0mm – ±0.52 UPTO 60.0mm – ±0.60	UPTO 80.0mm – ±0.70 UPTO 100.0mm – ±0.80 UPTO 120.0mm – ±0.90 UPTO 140.0mm – ±1.00 UPTO 160.0mm – ±1.14	UPTO 180.0mm – ±1.27 UPTO 200.0mm – ±1.40 UPTO 225.0mm – ±1.52	1. STRAIGHTNESS=1.7mm/M 2. TWIST=1.7mm/M 3. ANGULARITY= ±2° 4. FLATNESS =0.006xWIDTH

			NAME	DATE
JINDAL SYMBOL OF QUALITY AN ISO 9001 COMPANY	*JINDAL ALUMINIUM LTD.* *BANGALORE–560073 (INDIA)*	DRAWN	J.P.KAUSHIK	26–09–2019
		CHECKED		
		APPROVED	B.NATARAJA	18–10–2019

1. ALL DIMENSIONS ARE IN mm.
2. ROUND OFF ALL SHARP CORNERS WITH 0.40 mm.
3. TOLERANCES WILL BE AS PER IS:6477–1983 UNLESS OTHERWISE SPECIFIED

SCALE		1:1	
AREA mm^2		3840.976	
PERIMETER mm.		540.99	
WEIGHT kg/m		10.371	
DRAWING No.		SECTION No.	
P–20177		–	
S6512		S6512	

PARTY'S NAME	AVI WORLDWIDE PVT. LTD., MUMBAI
PARTY'S DRAWING No.	AVI–5918–B(EX0000380)
ALLOY & TEMPER	6063 T6
DESCRIPTION	MISC. SECTION