P–20206
S6517

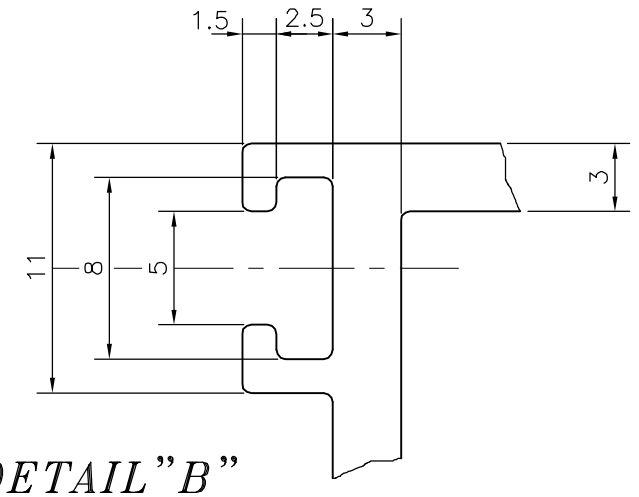

DETAIL"B"
(3:1)

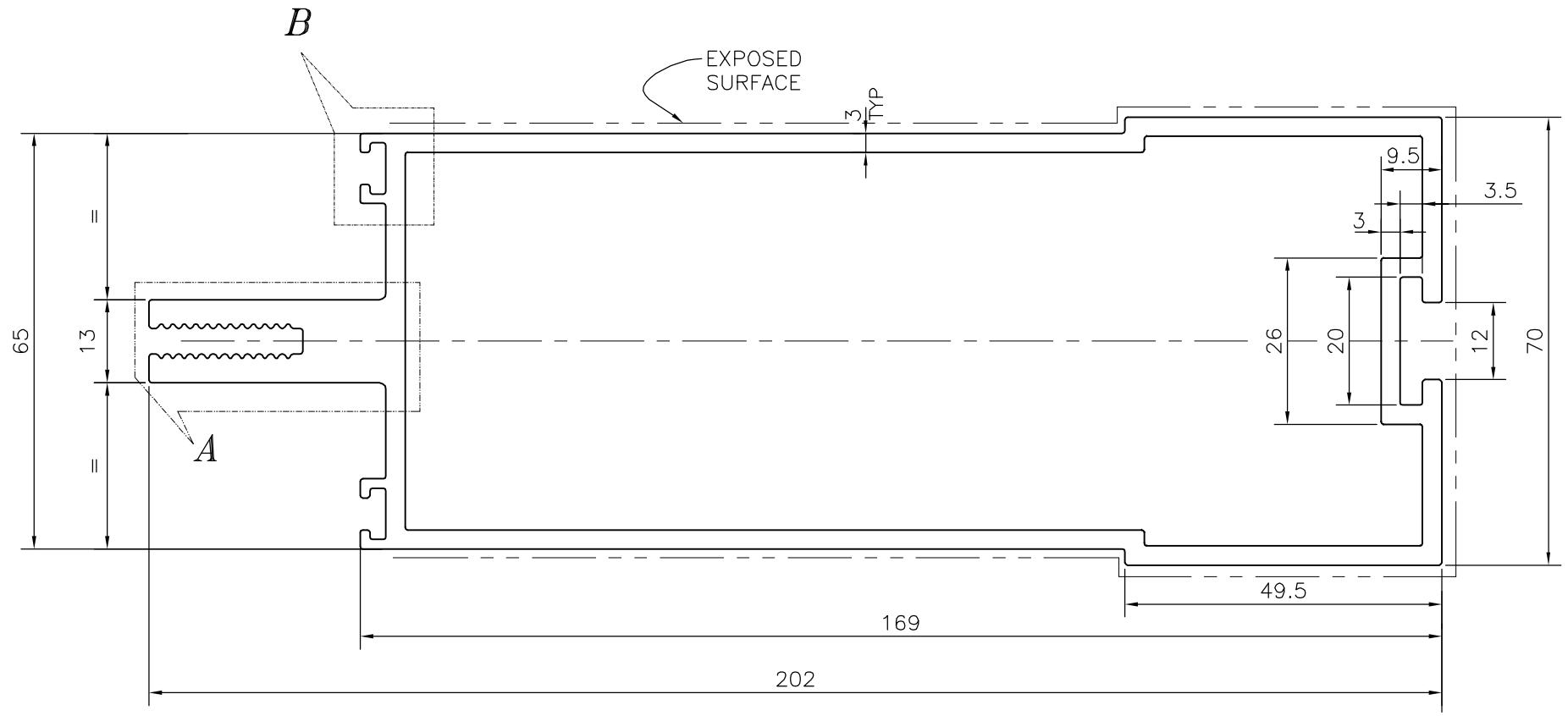

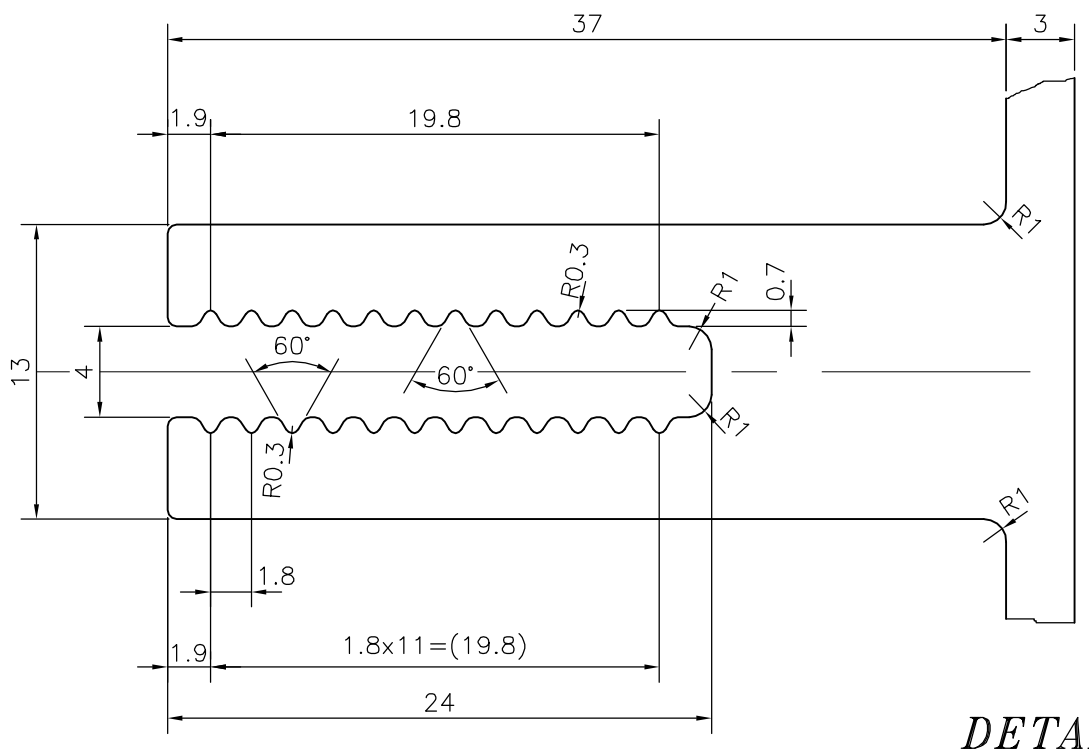

DETAIL"A"
(3:1)

TOLERANCES ON OVERALL DIMENSIONS OF HOLLOW SECTIONS			
UPTO 20.0mm – ±0.30 UPTO 30.0mm – ±0.38 UPTO 40.0mm – ±0.45 UPTO 50.0mm – ±0.52 UPTO 60.0mm – ±0.60	UPTO 80.0mm – ±0.70 UPTO 100.0mm – ±0.80 UPTO 120.0mm – ±0.90 UPTO 140.0mm – ±1.00 UPTO 160.0mm – ±1.14	UPTO 180.0mm – ±1.27 UPTO 200.0mm – ±1.40 UPTO 225.0mm – ±1.52	1. STRAIGHTNESS=1.7mm/M 2. TWIST=1.7mm/M 3. ANGULARITY= ±2° 4. FLATNESS =0.006xWIDTH

JINDAL
SYMBOL OF QUALITY
AN ISO 9001 COMPANY

JINDAL ALUMINIUM LTD.
BANGALORE–560073 (INDIA)

1. ALL DIMENSIONS ARE IN mm.
2. ROUND OFF ALL SHARP CORNERS WITH 0.40 mm.
3. TOLERANCES WILL BE AS PER IS:6477–1983 UNLESS OTHERWISE SPECIFIED

	NAME	DATE
DRAWN	J.P.KAUSHIK	25–11–2019
CHECKED		
APPROVED	B.NATARAJA	25–11–2019
SCALE		1:1
AREA mm^2		1842.571
PERIMETER mm.		672.718
WEIGHT kg/m		4.975

PARTY'S NAME	MFAR CONSTRUCTIONS PVT. LTD., BANGALORE
PARTY'S DRAWING No.	AS PER DRAWING
ALLOY & TEMPER	6063 T6
DESCRIPTION	CURTAIN WALL SECTION

DRAWING No.	SECTION No.
P–20206	–
S6517	S6517