P–20302
S6559

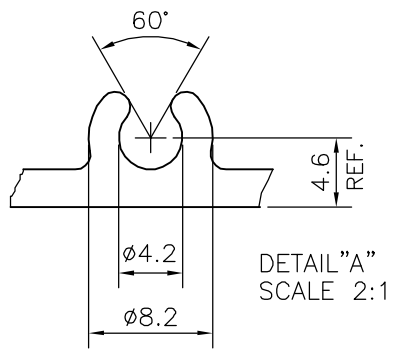

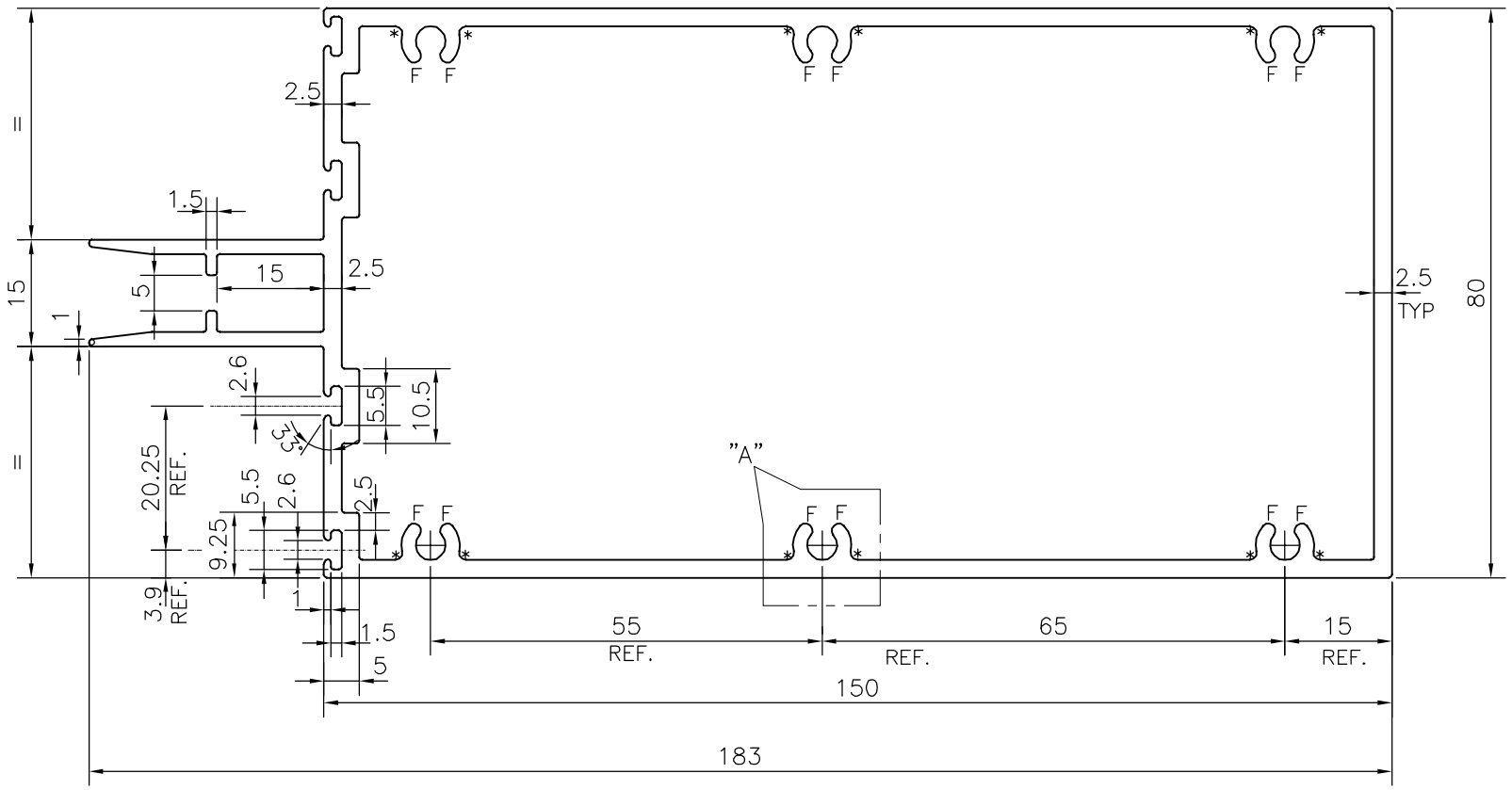

F= FULL RADIUS (12 PLACES)

*= 1.0 RADIUS (12 PLACES)

TOLERANCES ON OVERALL WIDTHS & WIDTHS ACROSS FLATS OF BARS, & REGULAR SECTIONS			
UPTO 6.40mm – ±0.20 UPTO 10.0mm – ±0.23 UPTO 12.0mm – ±0.25 UPTO 16.0mm – ±0.28 UPTO 25.0mm – ±0.30	UPTO 32.0mm – ±0.38 UPTO 50.0mm – ±0.46 UPTO 60.0mm – ±0.53 UPTO 80.0mm – ±0.69 UPTO 100.0mm – ±0.75	UPTO 120.0mm – ±0.85 UPTO 160.0mm – ±1.02 UPTO 200.0mm – ±1.14 UPTO 250.0mm – ±1.40 UPTO 300.0mm – ±1.65	UPTO 320.00mm – ±1.70

JINDAL

SYMBOL OF QUALITY
AN ISO 9001 COMPANY

JINDAL ALUMINIUM LTD.

BANGALORE–560073 (INDIA)

	NAME	DATE
DRAWN	J.P.KAUSHIK	22–10–2019
CHECKED		
APPROVED	B.NATARAJA	18–11–2019

1. ALL DIMENSIONS ARE IN mm.
2. ROUND OFF ALL SHARP CORNERS WITH 0.40 mm.
3. TOLERANCES WILL BE AS PER IS:6477–1983 UNLESS OTHERWISE SPECIFIED

SCALE	1:1
AREA mm^2	1432.973
PERIMETER mm.	635.264
WEIGHT kg/m	3.869

PARTY'S NAME	ALFA FACADE SYSTEMS PVT. LTD., PUNE
PARTY'S DRAWING No.	AS PER DRAWING
ALLOY & TEMPER	6063 T6
DESCRIPTION	CURTAIN WALL TRANSOM SECTION

DRAWING No.	SECTION No.
P–20302	–
S6559	S6559