| |
|---|
| P−20457 |
| S6572 |
| |

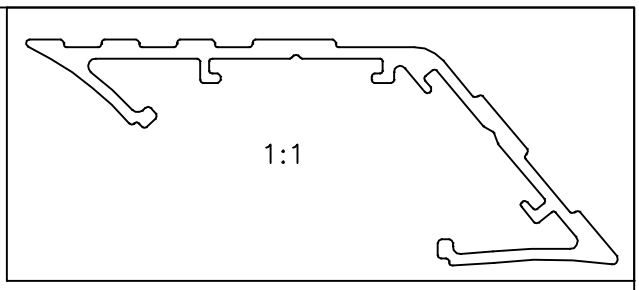


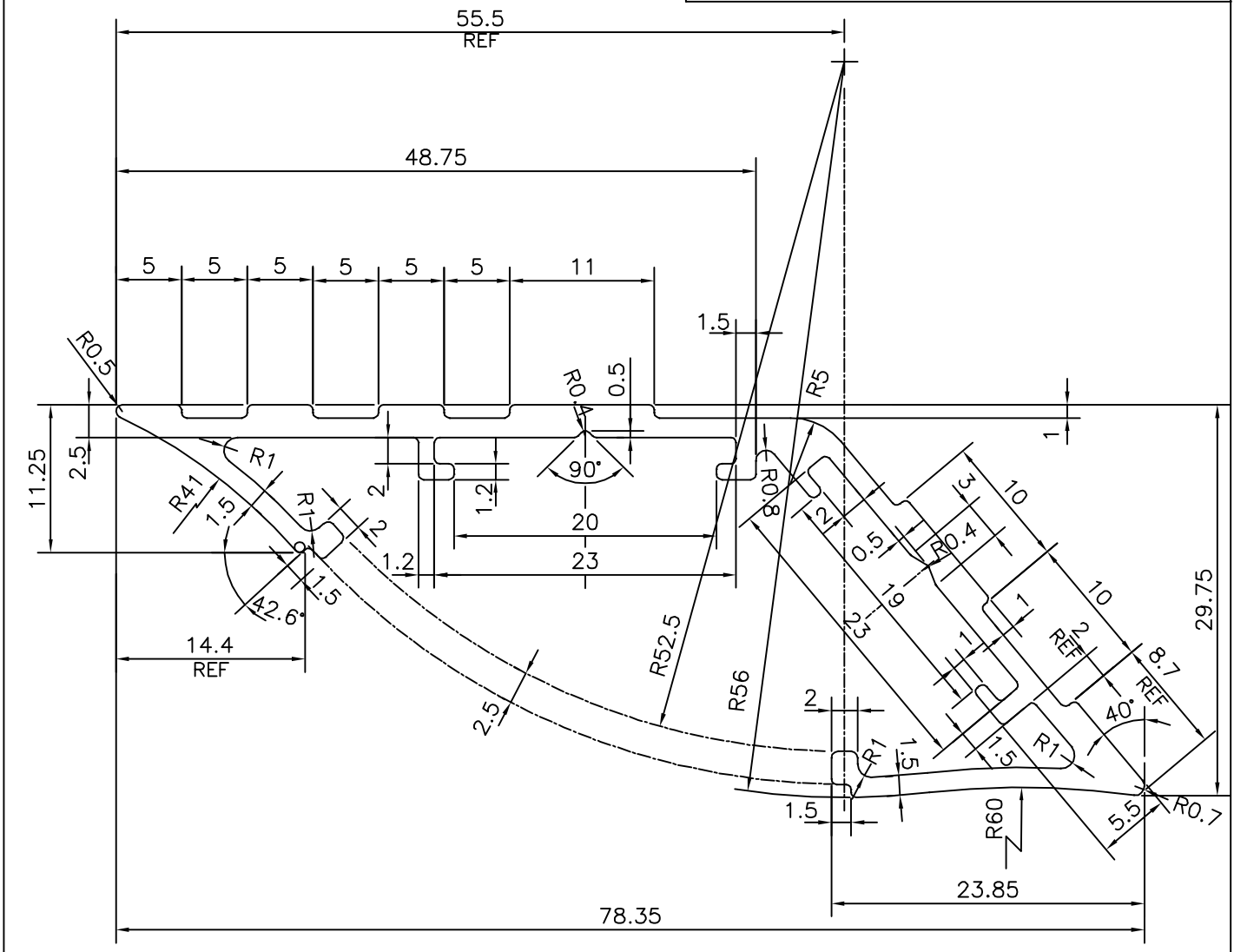


TOLERANCES ON OVERALL DIMENSIONS OF HOLLOW SECTIONS

| | | | |
|---|---|---|---|
| UPTO 20.0mm − ±0.30 | UPTO 80.0mm − ±0.70 | UPTO 180.0mm − ±1.27 | 1. STRAIGHTNESS=1.7mm/M |
| UPTO 30.0mm − ±0.38 | UPTO 100.0mm − ±0.80 | UPTO 200.0mm − ±1.40 | 2. TWIST=1.7mm/M |
| UPTO 40.0mm − ±0.45 | UPTO 120.0mm − ±0.90 | UPTO 225.0mm − ±1.52 | 3. ANGULARITY= ±2° |
| UPTO 50.0mm − ±0.52 | UPTO 140.0mm − ±1.00 | | 4. FLATNESS =0.006xWIDTH |
| UPTO 60.0mm − ±0.60 | UPTO 160.0mm − ±1.14 | | |

JINDAL
SYMBOL OF QUALITY
AN ISO 9001 COMPANY

# JINDAL ALUMINIUM LTD.

*BANGALORE−560073 (INDIA)*

| | NAME | DATE |
|---|---|---|
| DRAWN | J.P.KAUSHIK | 23−11−2019 |
| CHECKED | | |
| APPROVED | B.NATARAJA | 27−11−2019 |

1. ALL DIMENSIONS ARE IN mm.
2. ROUND OFF ALL SHARP CORNERS WITH 0.40 mm.
3. TOLERANCES WILL BE AS PER IS:3965−1981 , UNLESS OTHERWISE SPECIFIED

| | |
|---|---|
| SCALE | 2:1 |
| AREA $mm^2$ | 265.437 |
| PERIMETER mm. | 286.21 |
| WEIGHT kg/m | 0.717 |

| | |
|---|---|
| PARTY'S NAME | FENEX LUMINOUS PVT. LTD., BANGALORE |
| PARTY'S DRAWING No. | F009 TAR ALU |
| ALLOY & TEMPER | 6063 T6 |
| DESCRIPTION | ELECTRICAL SECTION |

| DRAWING No. | SECTION No. |
|---|---|
| P−20457 | − |
| S6572 | S6572 |
| | |
| | |
| | |