P–20431
S6611

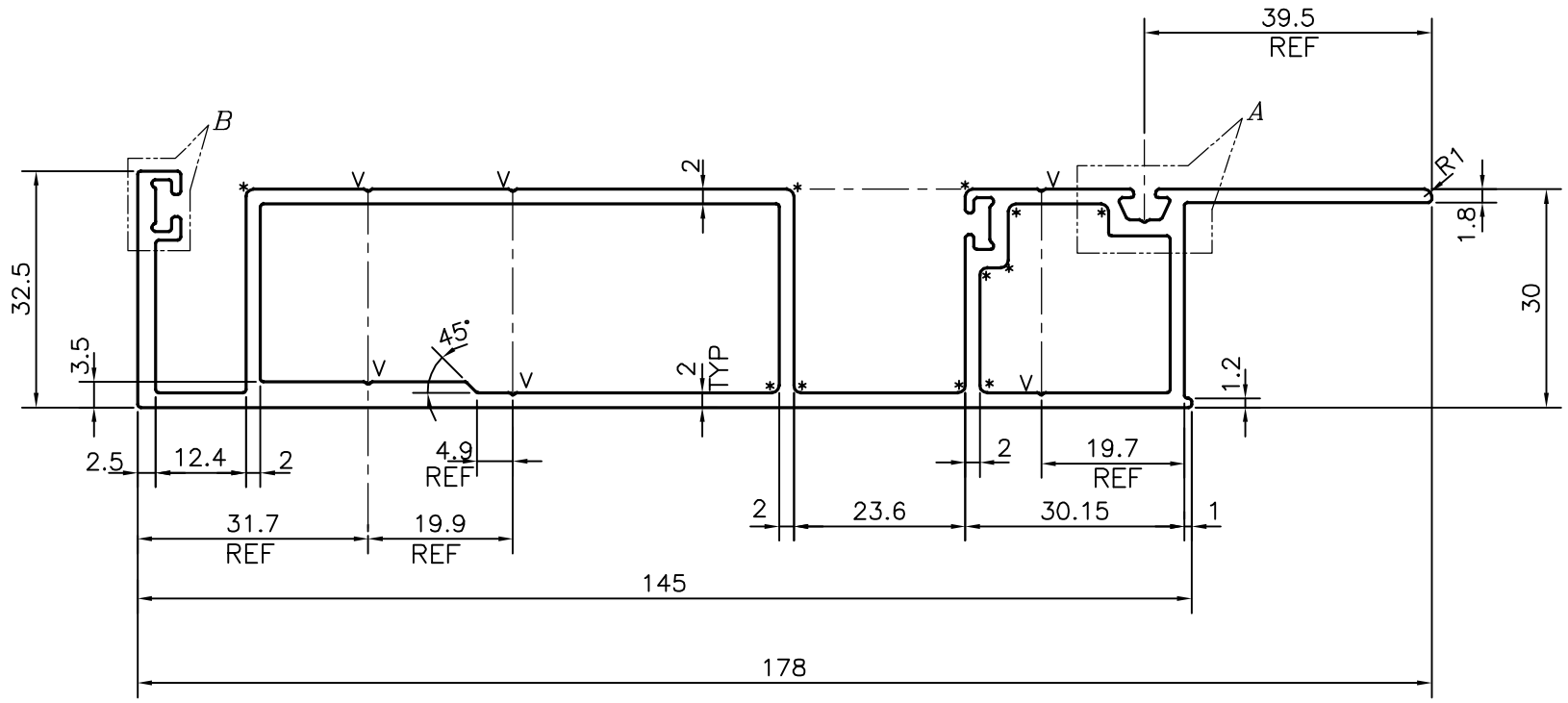

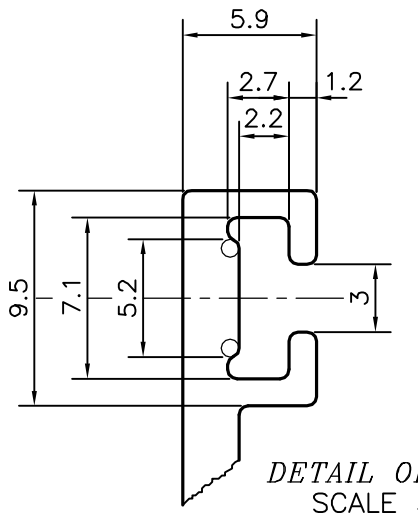

DETAIL OF "B"
SCALE 3:1

V = V GROOVE 0.3x90°(6 PLACES)

* = 1.0 RADIUS (11 PLACES)

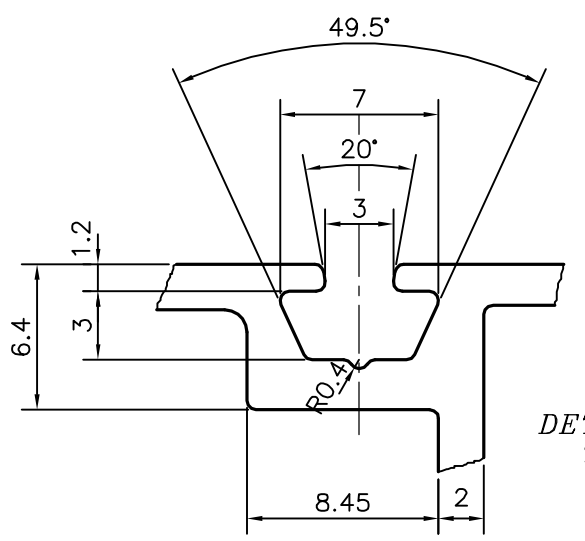

DETAIL OF "A"
SCALE 3:1

TOLERANCES ON OVERALL DIMENSIONS OF HOLLOW SECTIONS

UPTO 20.0mm – ±0.30	UPTO 80.0mm – ±0.70	UPTO 180.0mm – ±1.27	1. STRAIGHTNESS=1.7mm/M
UPTO 30.0mm – ±0.38	UPTO 100.0mm – ±0.80	UPTO 200.0mm – ±1.40	2. TWIST=1.7mm/M
UPTO 40.0mm – ±0.45	UPTO 120.0mm – ±0.90	UPTO 225.0mm – ±1.52	3. ANGULARITY= ±2°
UPTO 50.0mm – ±0.52	UPTO 140.0mm – ±1.00		4. FLATNESS =0.006xWIDTH
UPTO 60.0mm – ±0.60	UPTO 160.0mm – ±1.14		

JINDAL
SYMBOL OF QUALITY
AN ISO 9001 COMPANY

JINDAL ALUMINIUM LTD.
BANGALORE–560073 (INDIA)

1. ALL DIMENSIONS ARE IN mm.
2. ROUND OFF ALL SHARP CORNERS WITH 0.40 mm.
3. TOLERANCES WILL BE AS PER IS:6477–1983 , UNLESS OTHERWISE SPECIFIED

	NAME	DATE
DRAWN	J.P.KAUSHIK	16–11–2019
CHECKED		
APPROVED	B.NATARAJA	16–12–2019

SCALE	1:1
AREA mm^2	930.027
PERIMETER mm.	581.417
WEIGHT kg/m	2.511

DRAWING No.	SECTION No.
P–20431	–
S6611	S6611

PARTY'S NAME	MARVEL TOUCH ALUMINIUM PVT. LTD., NAVI MUMBAI
PARTY'S DRAWING No.	AS PER DRAWING
ALLOY & TEMPER	6063 T6
DESCRIPTION	FEMALE MULLION SECTION