P−19188−2
S6617

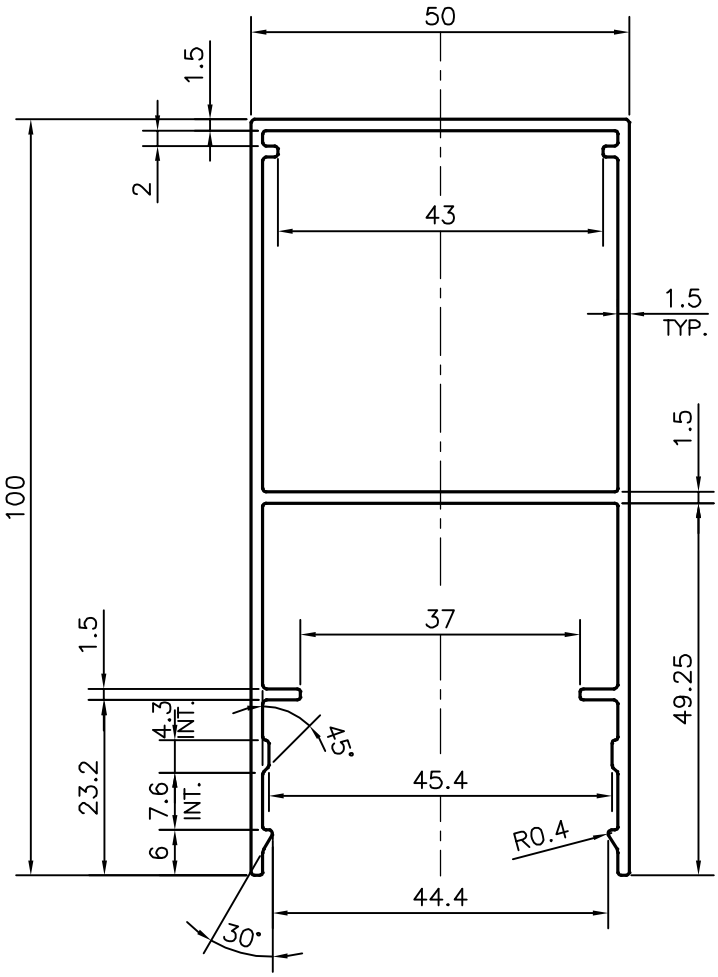

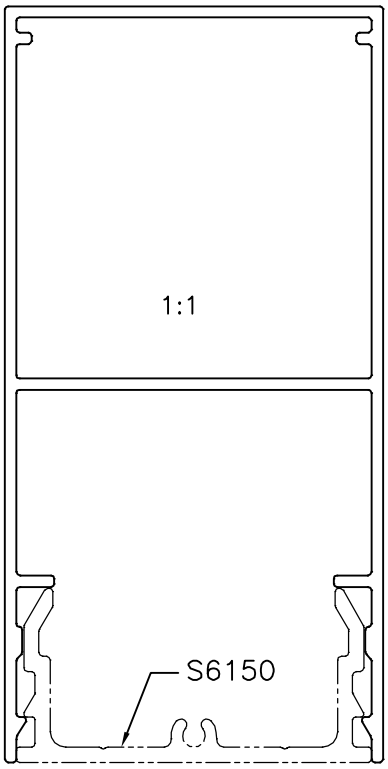

JINDAL SYMBOL OF QUALITY AN ISO 9001 COMPANY	*JINDAL ALUMINIUM LTD.* *BANGALORE−560073 (INDIA)*		NAME	DATE
		DRAWN	J.P.KAUSHIK	20−12−2019
		CHECKED		
		APPROVED	*B.NATARAJA*	23−12−2019
1. ALL DIMENSIONS ARE IN mm. 2. ROUND OFF ALL SHARP CORNERS WITH 0.40 mm. 3. TOLERANCES WILL BE AS PER IS:6477−1983 , UNLESS OTHERWISE SPECIFIED		SCALE		1:1
		AREA mm^2		472.573
		PERIMETER mm.		419.664
		WEIGHT kg/m		1.276
PARTY'S NAME	CEIFLO TECHNOLOGIES PVT. LTD., BANGALORE	DRAWING No.		SECTION No.
PARTY'S DRAWING No.	CBC−C003 & REQUIREMENT	P−19188−2		−
ALLOY & TEMPER	6063 T6	S6617		S6617
DESCRIPTION	ARCHITECTURAL SECTION			