P−19634−1
S6627

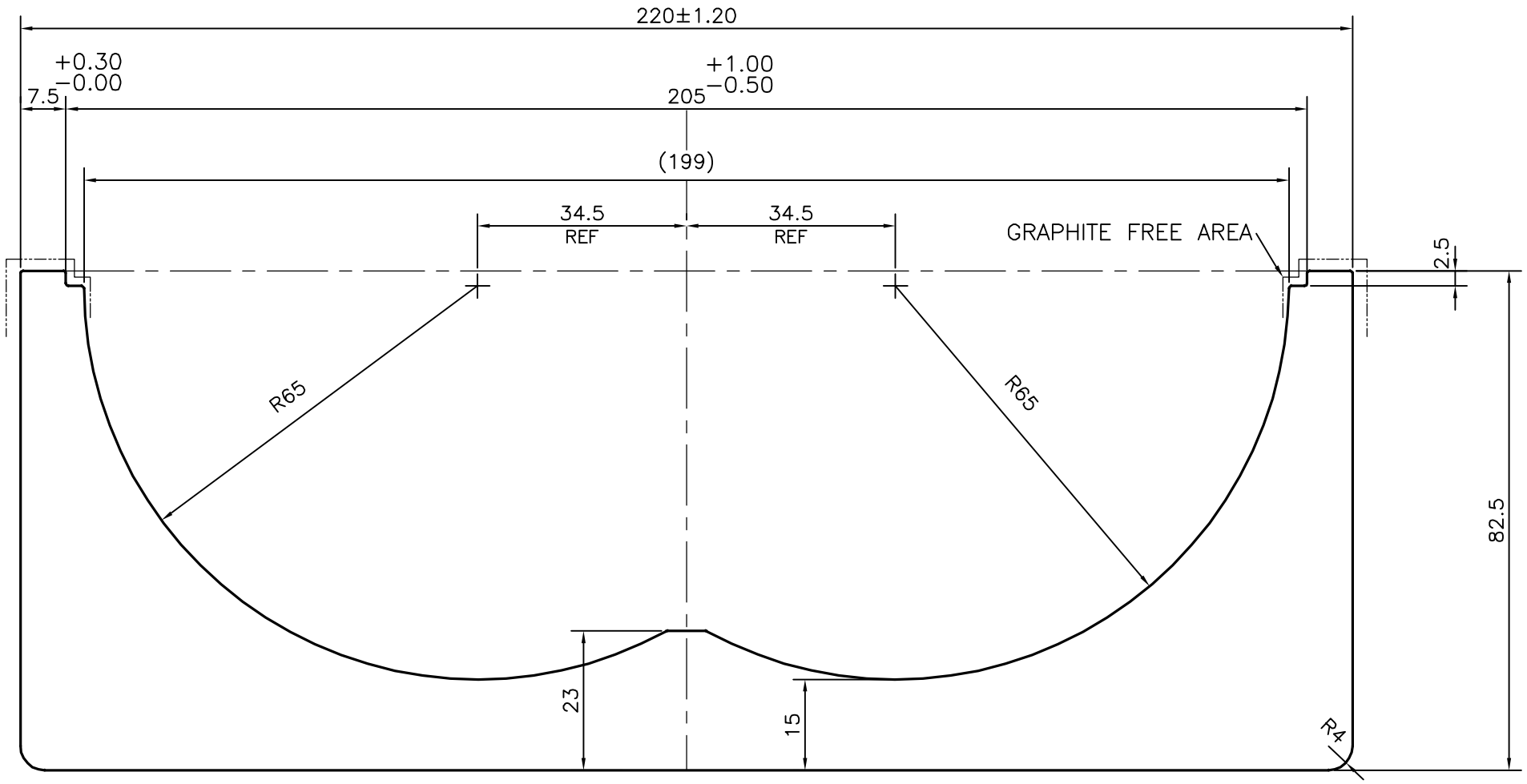

1 TENSILE STRENGTH:−215MPa Minimum
2 YIELD POINT:−160MPa Minimum
3 FRACTURE ELONGATION:−12% Minimum
4 STRAIGHTNESS=0.5mm/M
5. FLATNESS =1.0mm/M
6 TWIST=0.5mm/M
7 ALL DETAIL AS PER DELIVERY SPECIFICATION No:−415001−eng
8 SURFACE ROUGHNESS VALUE AS Rz 25 um
9 ORDER LENGTH 5 Mtr± 5mm

JINDAL SYMBOL OF QUALITY AN ISO 9001 COMPANY	*JINDAL ALUMINIUM LTD.* *BANGALORE−560073 (INDIA)*		NAME	DATE
		DRAWN	J.P.KAUSHIK	18−06−2019
		CHECKED		
		APPROVED	B.NATARAJA	26−12−2019
1. ALL DIMENSIONS ARE IN mm. 2. ROUND OFF ALL SHARP CORNERS WITH 0.40 mm. 3. TOLERANCES WILL BE AS PER IS:3965−1981 UNLESS OTHERWISE SPECIFIED		SCALE		1:1
		AREA mm^2		6723.312
		PERIMETER mm.		682.087
		WEIGHT kg/m		18.153
PARTY'S NAME	AKG INDIA PVT. LTD., COIMBATORE	DRAWING No.		SECTION No.
PARTY'S DRAWING No.	8420.170.0000	P−19634−1		−
ALLOY & TEMPER	6060 T66	S6627		S6627
DESCRIPTION	CHANNEL−MISC.			