P–20509	
S6655	

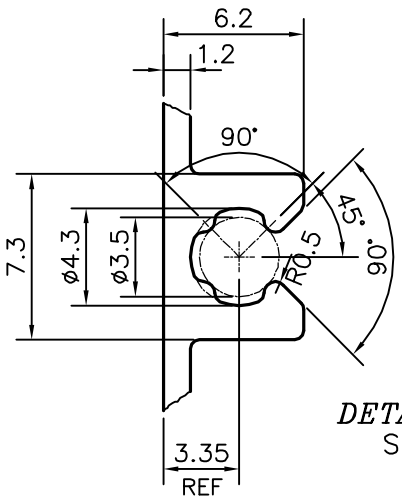

DETAIL OF "A"
SCALE 3:1

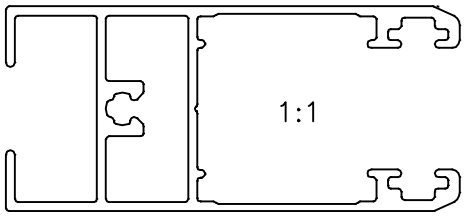

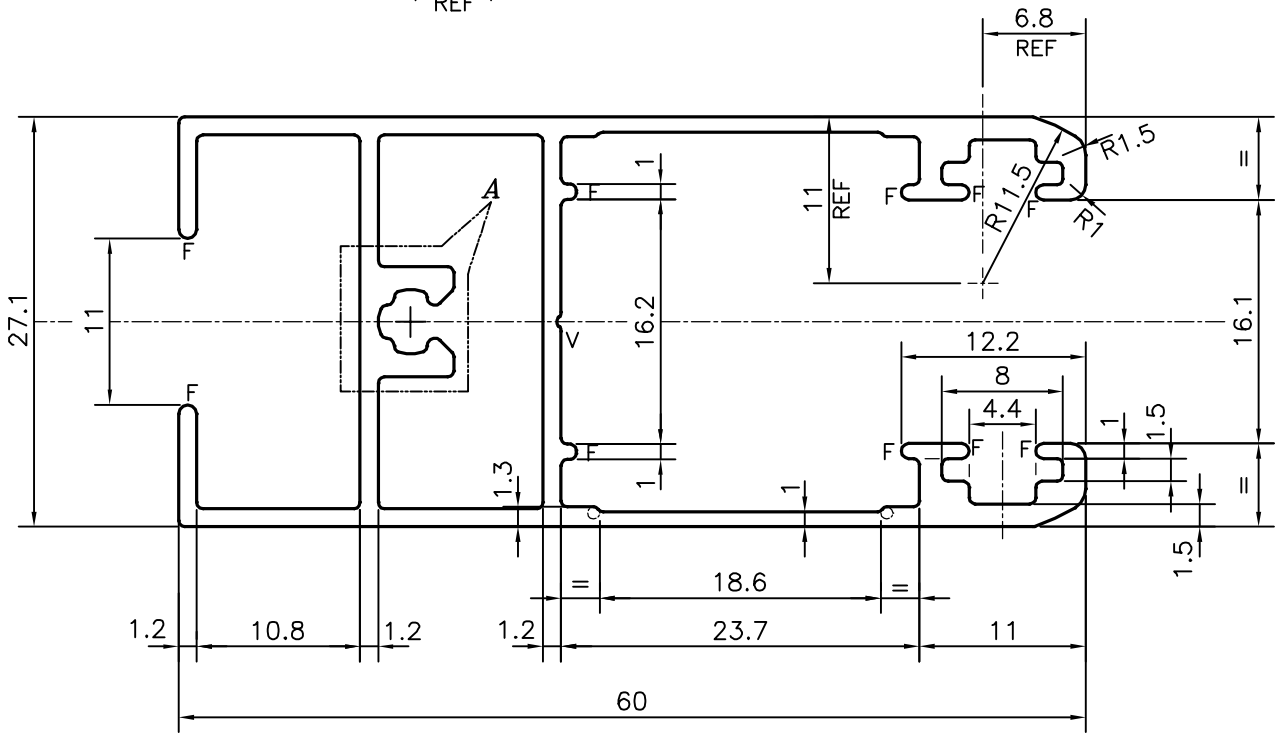

F = FULL RADIUS(10 PLACES)
V = V GROOVE 0.3x90°(I PLACE)

TOLERANCES ON OVERALL DIMENSIONS OF HOLLOW SECTIONS

UPTO 20.0mm – ±0.30	UPTO 80.0mm – ±0.70	UPTO 180.0mm – ±1.27	1. STRAIGHTNESS=1.7mm/M
UPTO 30.0mm – ±0.38	UPTO 100.0mm – ±0.80	UPTO 200.0mm – ±1.40	2. TWIST=1.7mm/M
UPTO 40.0mm – ±0.45	UPTO 120.0mm – ±0.90	UPTO 225.0mm – ±1.52	3. ANGULARITY= ±2°
UPTO 50.0mm – ±0.52	UPTO 140.0mm – ±1.00		4. FLATNESS =0.006xWIDTH
UPTO 60.0mm – ±0.60	UPTO 160.0mm – ±1.14		

JINDAL
SYMBOL OF QUALITY
AN ISO 9001 COMPANY

JINDAL ALUMINIUM LTD.

BANGALORE–560073 (INDIA)

	NAME	DATE
DRAWN	J.P.KAUSHIK	13–12–2019
CHECKED		
APPROVED	B.NATARAJA	18–01–2020

1. ALL DIMENSIONS ARE IN mm.
2. ROUND OFF ALL SHARP CORNERS WITH 0.40 mm.
3. TOLERANCES WILL BE AS PER IS:6477–1983 , UNLESS OTHERWISE SPECIFIED

SCALE	2:1
AREA mm^2	280.327
PERIMETER mm.	338.047
WEIGHT kg/m	0.757

PARTY'S NAME	DEO LEELA FACADE SYSTEMS LLP, PUNE
PARTY'S DRAWING No.	DLFS–006
ALLOY & TEMPER	6063 T6
DESCRIPTION	WINDOW SECTION–TOP & BOTTOM

DRAWING No.	SECTION No.
P–20509	–
S6655	S6655