P–20616
S6658

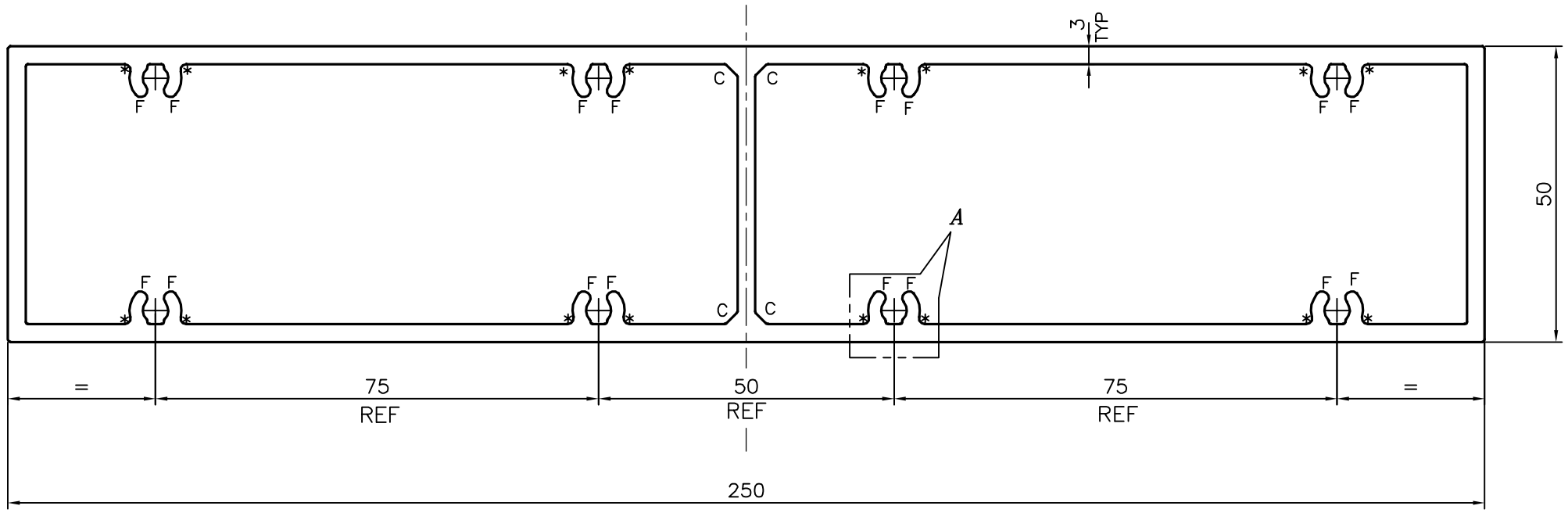

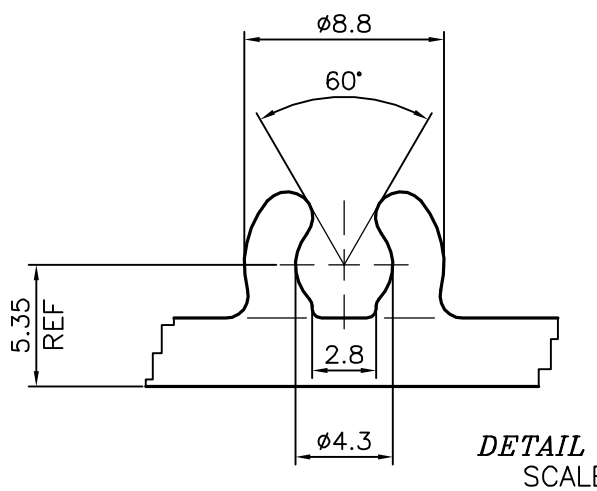

DETAIL OF "A"
SCALE 3:1

* = 1.0 RADIUS(16 PLACES)
C = CHAMFER 2x45°(4 PLACES)
F = FULL RADIUS(16 PLACES)

TOLERANCES ON OVERALL DIMENSIONS OF HOLLOW SECTIONS			
UPTO 20.0mm – ±0.30 UPTO 30.0mm – ±0.38 UPTO 40.0mm – ±0.45 UPTO 50.0mm – ±0.52 UPTO 60.0mm – ±0.60	UPTO 80.0mm – ±0.70 UPTO 100.0mm – ±0.80 UPTO 120.0mm – ±0.90 UPTO 140.0mm – ±1.00 UPTO 160.0mm – ±1.14	UPTO 180.0mm – ±1.27 UPTO 200.0mm – ±1.40 UPTO 225.0mm – ±1.52	1. STRAIGHTNESS=1.7mm/M 2. TWIST=1.7mm/M 3. ANGULARITY= ±2° 4. FLATNESS =0.006xWIDTH

JINDAL
SYMBOL OF QUALITY
AN ISO 9001 COMPANY

JINDAL ALUMINIUM LTD.
BANGALORE–560073 (INDIA)

	NAME	DATE
DRAWN	J.P.KAUSHIK	10–01–2020
CHECKED		
APPROVED	B.NATARAJA	20–01–2020

1. ALL DIMENSIONS ARE IN mm.
2. ROUND OFF ALL SHARP CORNERS WITH 0.40 mm.
3. TOLERANCES WILL BE AS PER IS:6477–1983 UNLESS OTHERWISE SPECIFIED

SCALE	1:1
AREA mm^2	2116.889
PERIMETER mm.	599.313
WEIGHT kg/m	5.716

PARTY'S NAME	UNIGLAZE INDIA PVT. LTD., BANGALORE
PARTY'S DRAWING No.	AS PER DRAWING
ALLOY & TEMPER	6063 T6
DESCRIPTION	VERTICAL FIN SECTION

DRAWING No.	SECTION No.
P–20616	–
S6658	S6658