P–20618
S6671

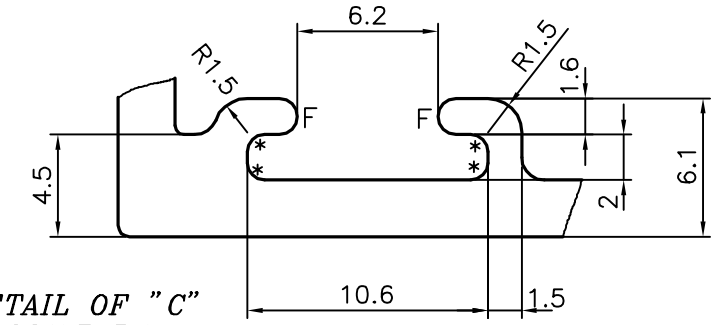

DETAIL OF "C"
SCALE 3:1

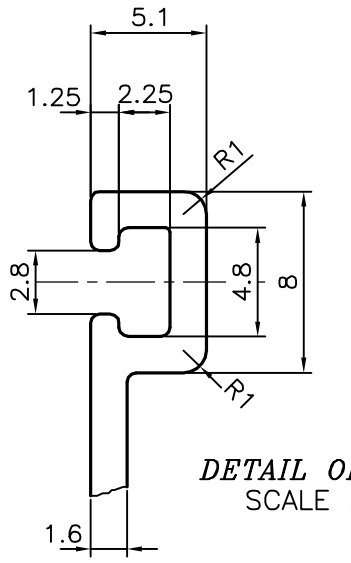

DETAIL OF "B"
SCALE 3:1

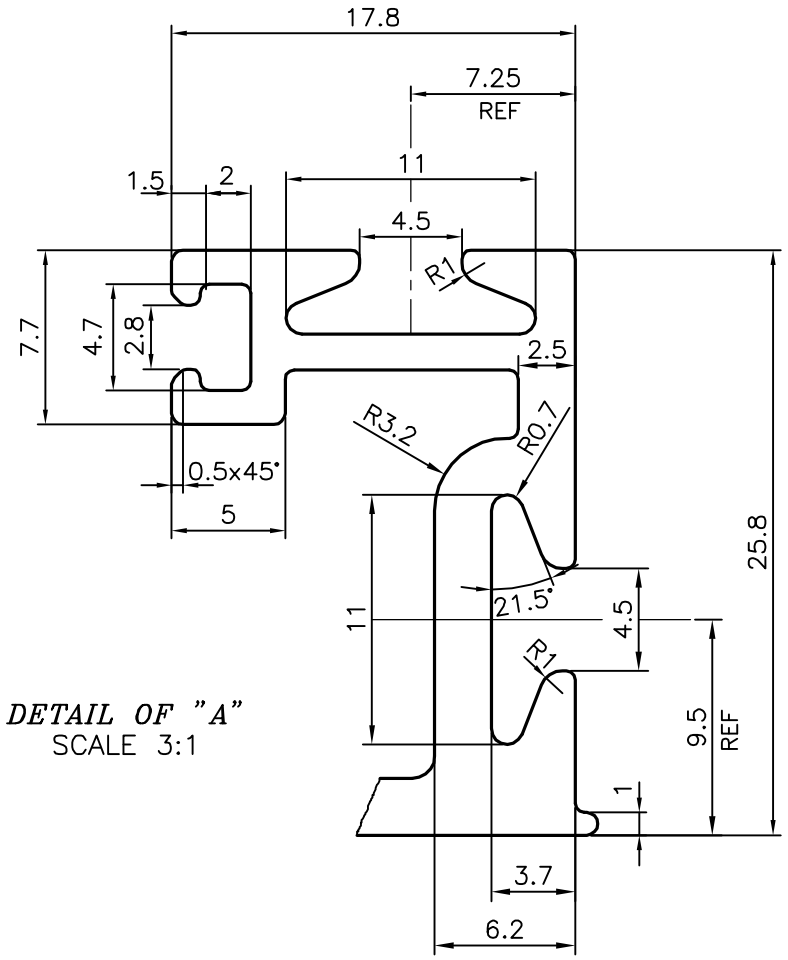

DETAIL OF "A"
SCALE 3:1

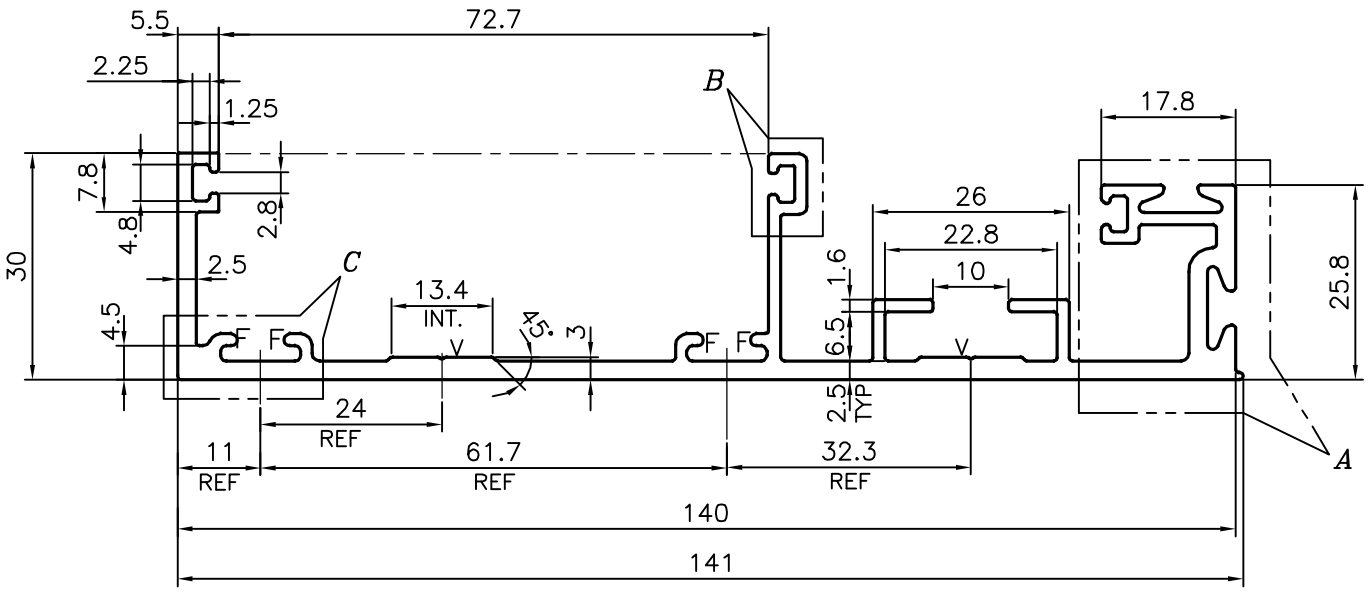

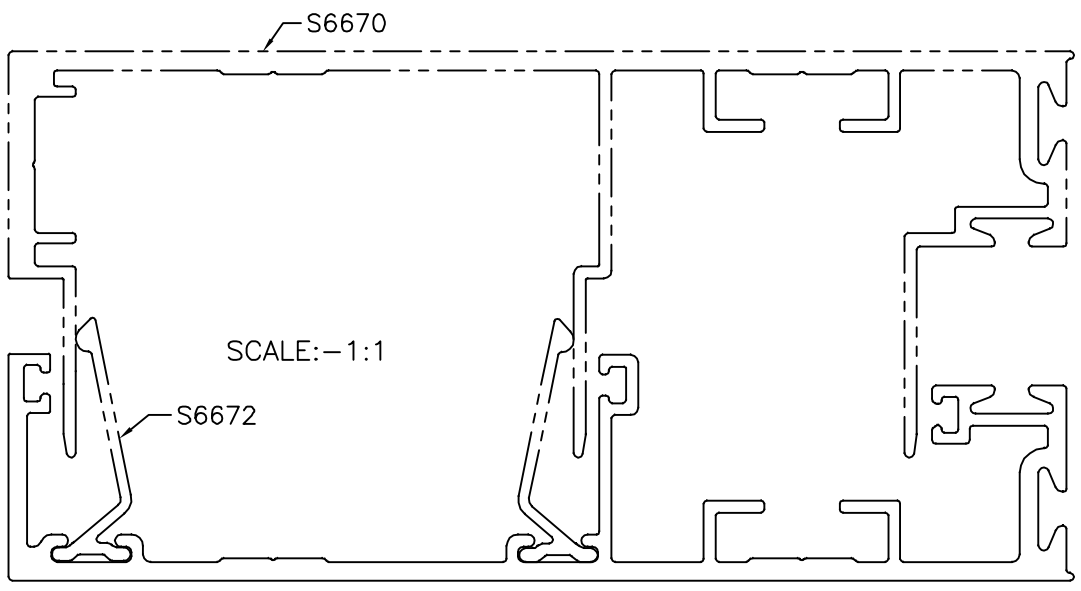

* = RADIUS 0.75 mm. (8 PLACES)
F = FULL RADIUS (4 PLACES)
V = V GROOVE 0.3x90° (2 PLACES)

TOLERANCES ON OVERALL DIMENSIONS OF HOLLOW SECTIONS			
UPTO 20.0mm – ±0.30 UPTO 30.0mm – ±0.38 UPTO 40.0mm – ±0.45 UPTO 50.0mm – ±0.52 UPTO 60.0mm – ±0.60	UPTO 80.0mm – ±0.70 UPTO 100.0mm – ±0.80 UPTO 120.0mm – ±0.90 UPTO 140.0mm – ±1.00 UPTO 160.0mm – ±1.14	UPTO 180.0mm – ±1.27 UPTO 200.0mm – ±1.40 UPTO 225.0mm – ±1.52	1. STRAIGHTNESS=1.7mm/M 2. TWIST=1.7mm/M 3. ANGULARITY= ±2° 4. FLATNESS =0.006xWIDTH

JINDAL
SYMBOL OF QUALITY
AN ISO 9001 COMPANY

JINDAL ALUMINIUM LTD.
BANGALORE–560073 (INDIA)

1. ALL DIMENSIONS ARE IN mm.
2. ROUND OFF ALL SHARP CORNERS WITH 0.40 mm.
3. TOLERANCES WILL BE AS PER IS:3965–1981 UNLESS OTHERWISE SPECIFIED

	NAME	DATE
DRAWN	J.P.KAUSHIK	11–01–2020
CHECKED		
APPROVED	B.NATARAJA	24–01–2020

SCALE	1:1
AREA mm^2	712.78
PERIMETER mm.	631.82
WEIGHT kg/m	1.925

DRAWING No.	SECTION No.
P–20618	–
S6671	S6671

PARTY'S NAME	HARDWARE SYNDICATE, BANGALORE
PARTY'S DRAWING No.	AS PER DRAWING
ALLOY & TEMPER	6063 T6
DESCRIPTION	FEMALE MULLION SECTION