| |
|---|
| P–20568 |
| S6678 |
| |

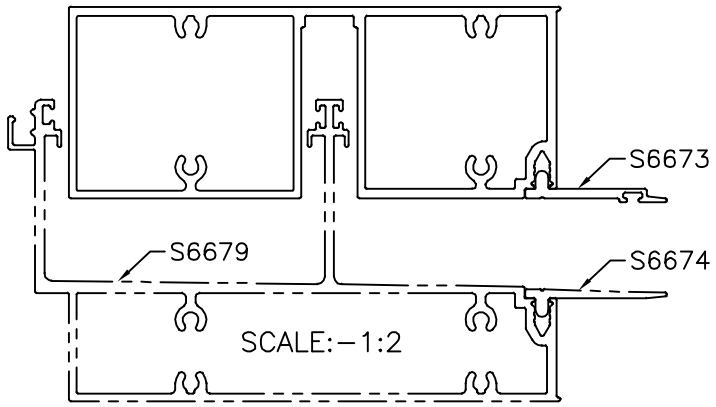


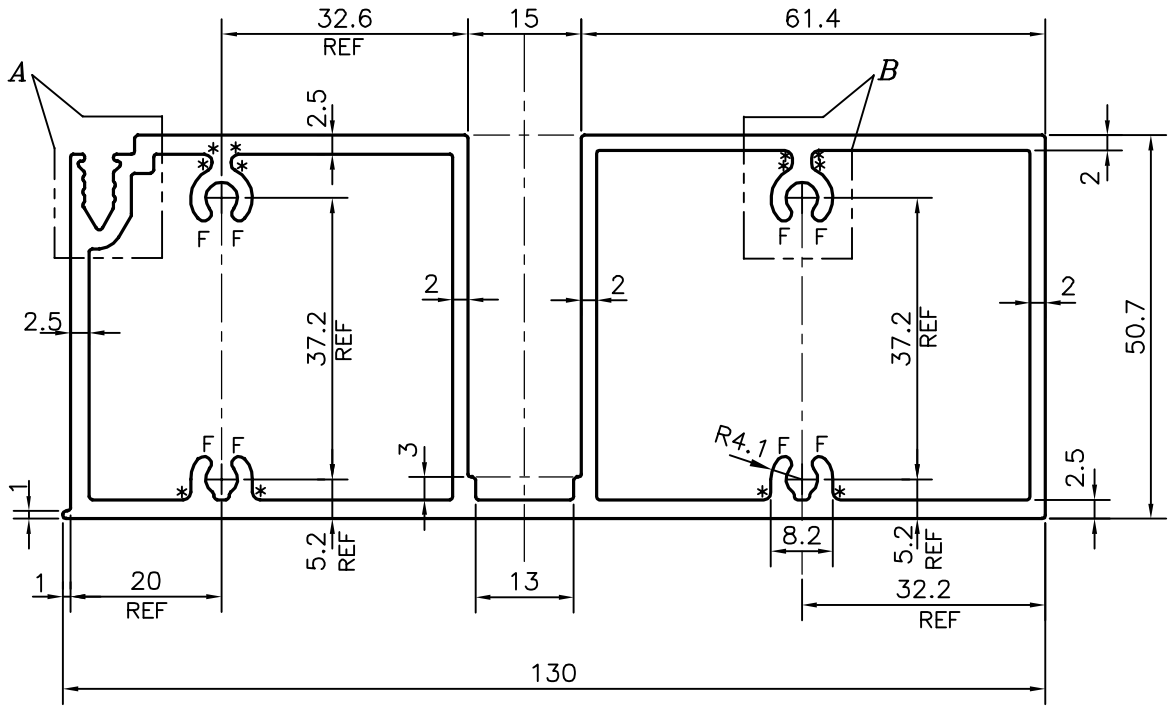


*= 1.0 RADIUS (12 PLACES )

F= FULL RADIUS (8 PLACES )

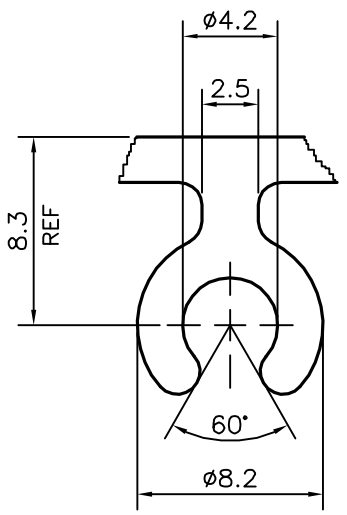


*DETAIL OF "B"*

SCALE :– 3:1

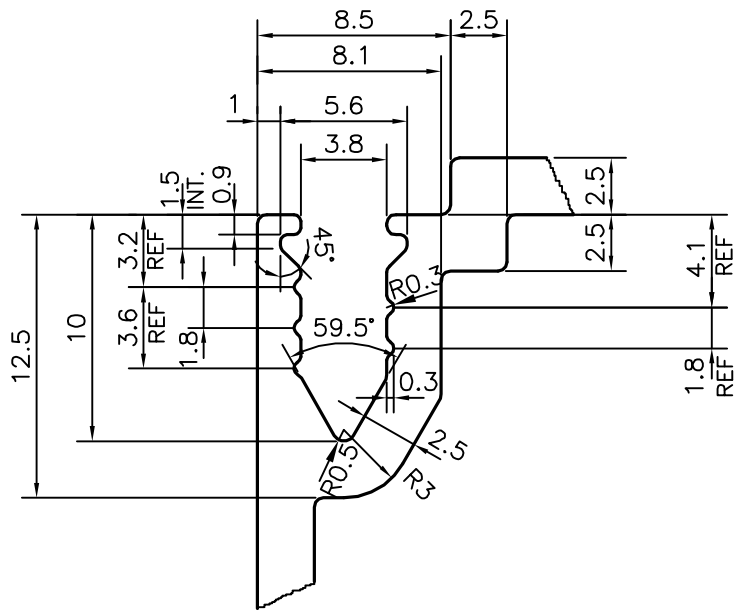


| TOLERANCES ON OVERALL DIMENSIONS OF HOLLOW SECTIONS | | | |
|---|---|---|---|
| UPTO 20.0mm – ±0.30<br>UPTO 30.0mm – ±0.38<br>UPTO 40.0mm – ±0.45<br>UPTO 50.0mm – ±0.52<br>UPTO 60.0mm – ±0.60 | UPTO 80.0mm – ±0.70<br>UPTO 100.0mm – ±0.80<br>UPTO 120.0mm – ±0.90<br>UPTO 140.0mm – ±1.00<br>UPTO 160.0mm – ±1.14 | UPTO 180.0mm – ±1.27<br>UPTO 200.0mm – ±1.40<br>UPTO 225.0mm – ±1.52 | 1. STRAIGHTNESS=1.7mm/M<br>2. TWIST=1.7mm/M<br>3. ANGULARITY= ±2°<br>4. FLATNESS =0.006xWIDTH |

| | | | NAME | DATE |
|---|---|---|---|---|
| SYMBOL OF QUALITY AN ISO 9001 COMPANY | *JINDAL ALUMINIUM LTD.*<br>*BANGALORE–560073 (INDIA)* | DRAWN | J.P.KAUSHIK | 02–01–2020 |
| | | CHECKED | | |
| | | APPROVED | B.NATARAJA | 25–01–2020 |

1. ALL DIMENSIONS ARE IN mm.
2. ROUND OFF ALL SHARP CORNERS WITH 0.40 mm.
3. TOLERANCES WILL BE AS PER IS:6477–1983 UNLESS OTHERWISE SPECIFIED

| | | | |
|---|---|---|---|
| SCALE | | 1:1 | |
| AREA $mm^2$ | | 1115.09 | |
| PERIMETER mm. | | 475.306 | |
| WEIGHT kg/m | | 3.011 | |
| DRAWING No. | | SECTION No. | |
| P–20568 | | – | |
| S6678 | | S6678 | |

| | |
|---|---|
| PARTY'S NAME | GLAZIUM FACADES PVT. LTD., PUNE |
| PARTY'S DRAWING No. | AS PER DRAWING |
| ALLOY & TEMPER | 6063 T6 |
| DESCRIPTION | CURTAIN WALL SECTION |