P–20609
S6692

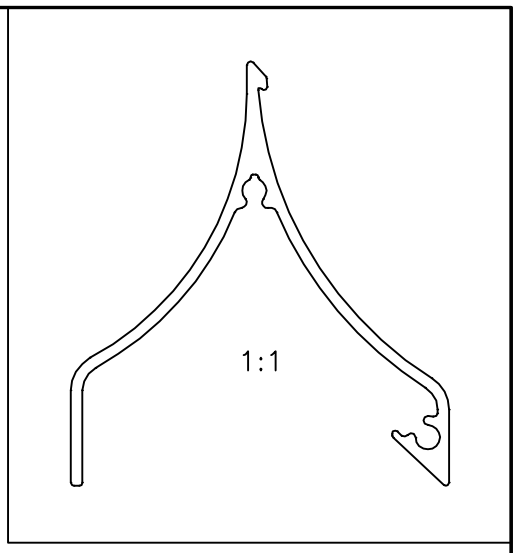

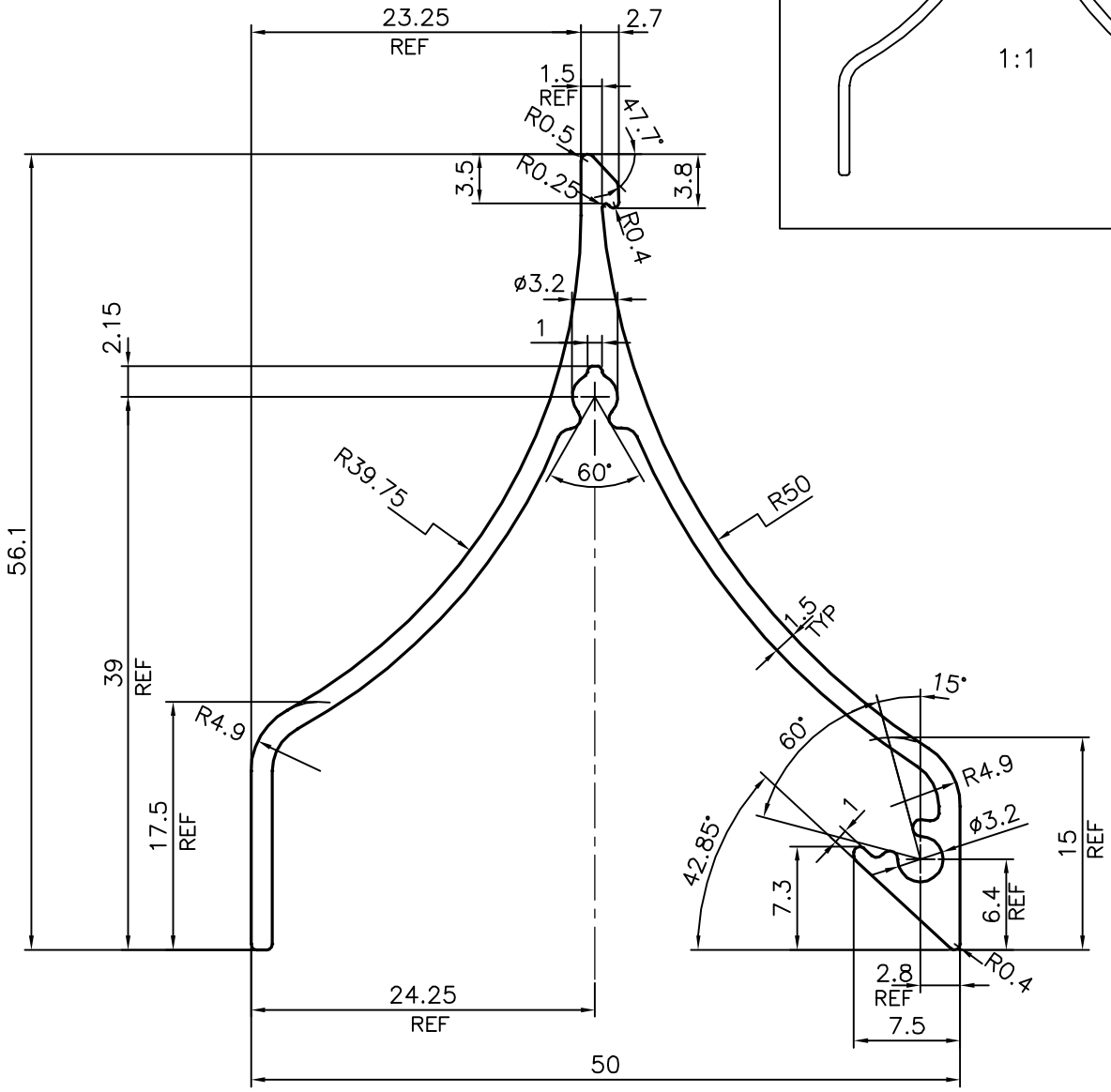

TOLERANCES ON OVERALL WIDTHS & WIDTHS ACROSS FLATS OF BARS, & REGULAR SECTIONS

UPTO 6.40mm – ±0.20	UPTO 32.0mm – ±0.38	UPTO 120.0mm – ±0.85	UPTO 320.00mm – ±1.70
UPTO 10.0mm – ±0.23	UPTO 50.0mm – ±0.46	UPTO 160.0mm – ±1.02	
UPTO 12.0mm – ±0.25	UPTO 60.0mm – ±0.53	UPTO 200.0mm – ±1.14	
UPTO 16.0mm – ±0.28	UPTO 80.0mm – ±0.69	UPTO 250.0mm – ±1.40	
UPTO 25.0mm – ±0.30	UPTO 100.0mm – ±0.75	UPTO 300.0mm – ±1.65	

JINDAL
SYMBOL OF QUALITY
AN ISO 9001 COMPANY

JINDAL ALUMINIUM LTD.

BANGALORE–560073 (INDIA)

	NAME	DATE
DRAWN	J.P.KAUSHIK	10–01–2020
CHECKED		
APPROVED	B.NATARAJA	25–01–2020

1. ALL DIMENSIONS ARE IN mm.
2. ROUND OFF ALL SHARP CORNERS WITH 0.40 mm.
3. TOLERANCES WILL BE AS PER IS:3965–1981 UNLESS OTHERWISE SPECIFIED

SCALE	2:1
AREA mm^2	209.183
PERIMETER mm.	251.967
WEIGHT kg/m	0.565

PARTY'S NAME	GLAZIUM FACADES PVT. LTD., PUNE
PARTY'S DRAWING No.	DWG–16
ALLOY & TEMPER	6063 T6
DESCRIPTION	Y TYPE LOUVER SECTION

DRAWING No.	SECTION No.
P–20609	–
S6692	S6692