P–20641
S6708

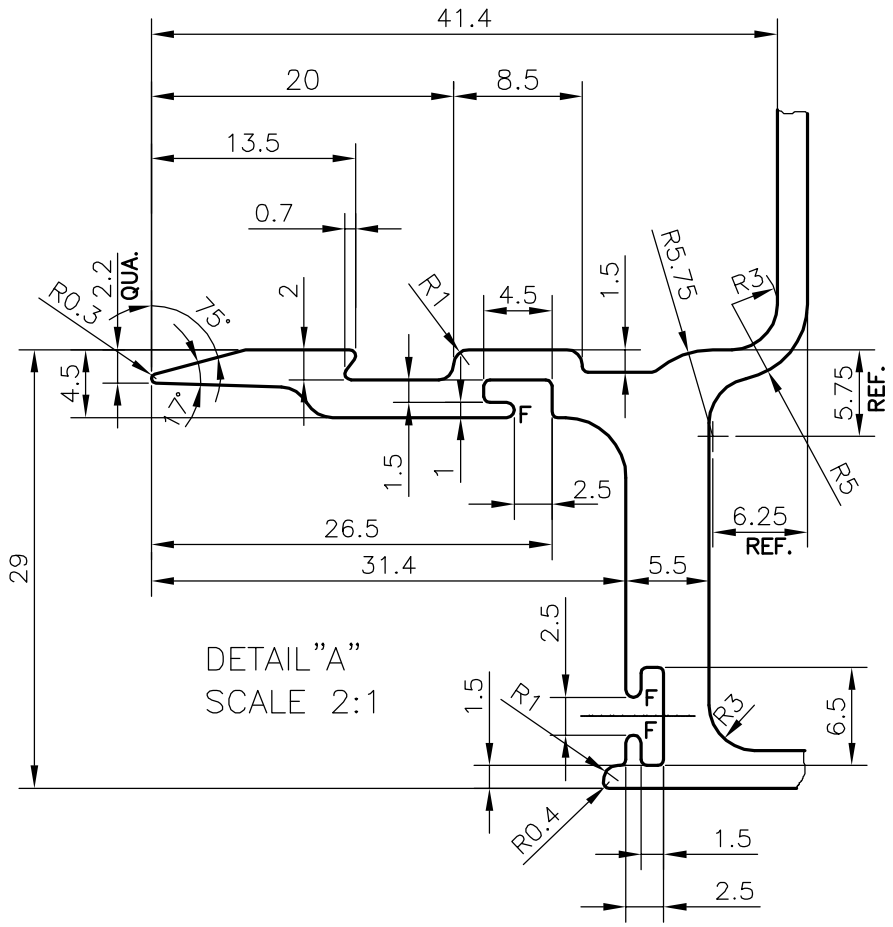

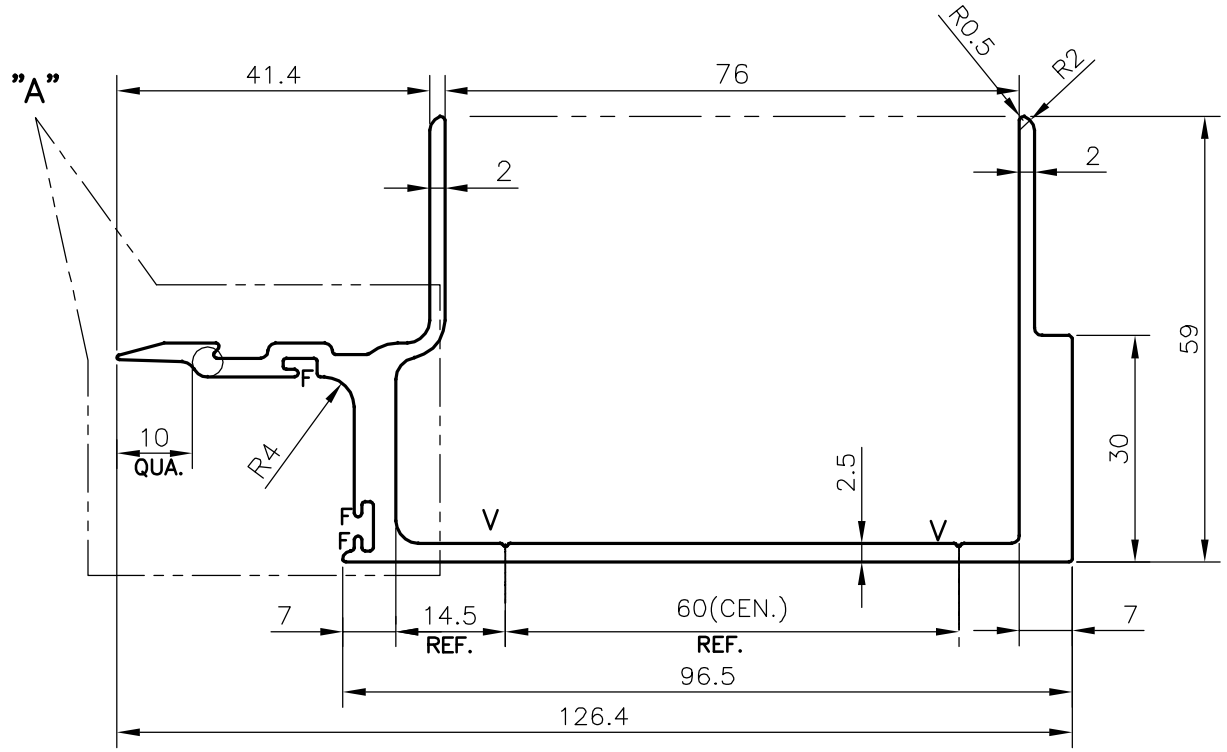

F = FULL RADIUS (3 PLACES)
V = V GROOVE 0.3x90° (2 PLACES)

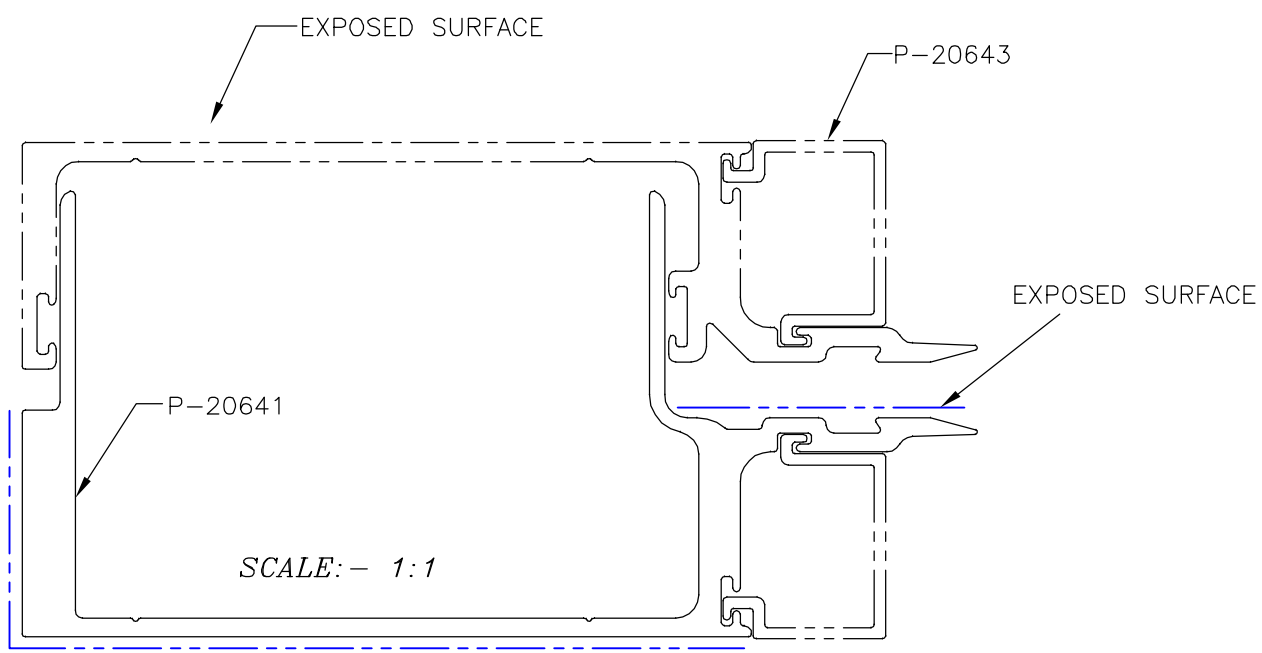

TOLERANCES ON OVERALL WIDTHS & WIDTHS ACROSS FLATS OF BARS, & REGULAR SECTIONS			
UPTO 6.40mm – ±0.20 UPTO 10.0mm – ±0.23 UPTO 12.0mm – ±0.25 UPTO 16.0mm – ±0.28 UPTO 25.0mm – ±0.30	UPTO 32.0mm – ±0.38 UPTO 50.0mm – ±0.46 UPTO 60.0mm – ±0.53 UPTO 80.0mm – ±0.69 UPTO 100.0mm – ±0.75	UPTO 120.0mm – ±0.85 UPTO 160.0mm – ±1.02 UPTO 200.0mm – ±1.14 UPTO 250.0mm – ±1.40 UPTO 300.0mm – ±1.65	**1. STRAIGHTNESS=1.7mm/M** **2. TWIST=1.7mm/M** **3. ANGULARITY= ±2°** **4. FLATNESS =0.007xWIDTH**

			NAME	DATE
JINDAL SYMBOL OF QUALITY AN ISO 9001 COMPANY	*JINDAL ALUMINIUM LTD.* *BANGALORE–560073 (INDIA)*	DRAWN	DARPAN	27–01–2020
		CHECKED		
		APPROVED	B.NATARAJA	04–02–2020

1. ALL DIMENSIONS ARE IN mm.
2. ROUND OFF ALL SHARP CORNERS WITH 0.40 mm.
3. TOLERANCES WILL BE AS PER **IS:3965–1981** , UNLESS OTHERWISE SPECIFIED

SCALE	1:1
AREA mm^2	780.279
PERIMETER mm.	509.894
WEIGHT kg/m	2.107

PARTY'S NAME	FACADE CLAD TECH PVT. LTD., BANGALORE
PARTY'S DRAWING No.	26–09–19R1
ALLOY & TEMPER	6063 T6
DESCRIPTION	CURTAIN WALL SECTION–MALE MULLION

DRAWING No.	SECTION No.
P–20641	–
S6708	S6708