P–20642
S6709

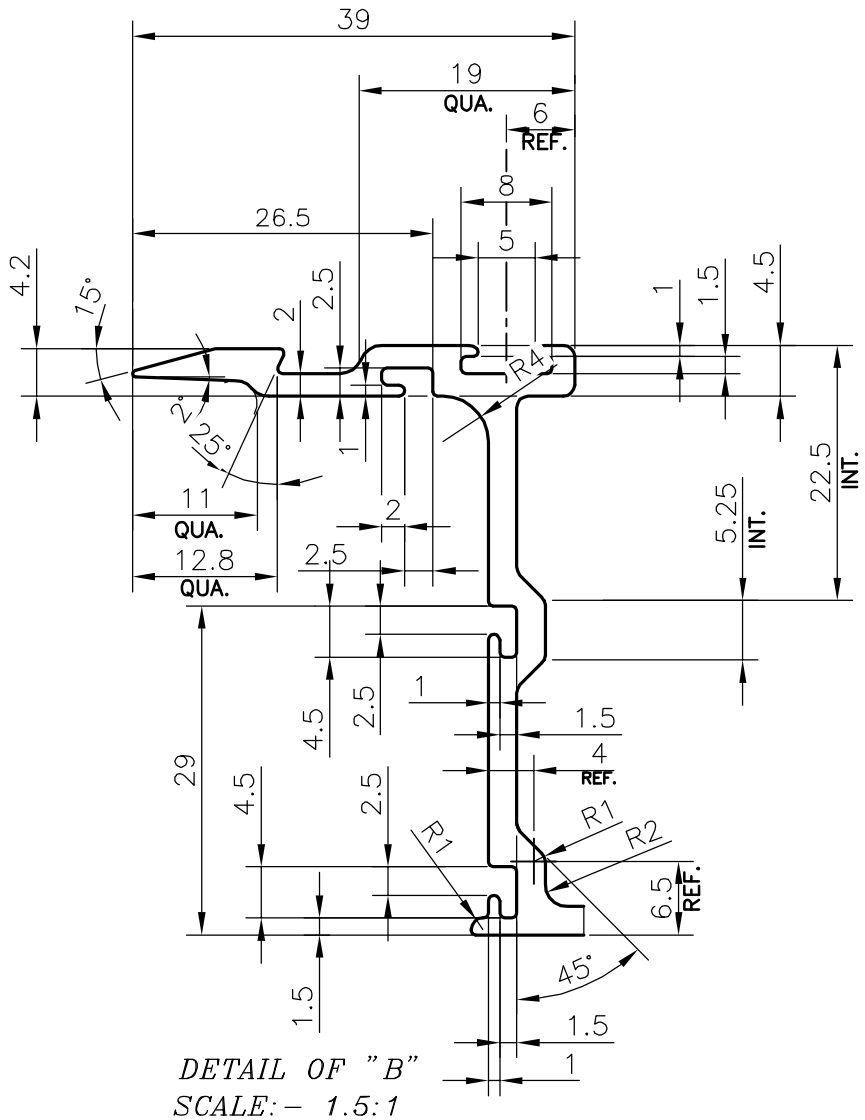

DETAIL OF "B"
SCALE:– 1.5:1

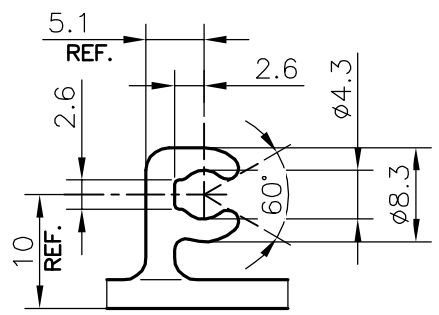

DETAIL OF "A"
SCALE:– 1.5:1

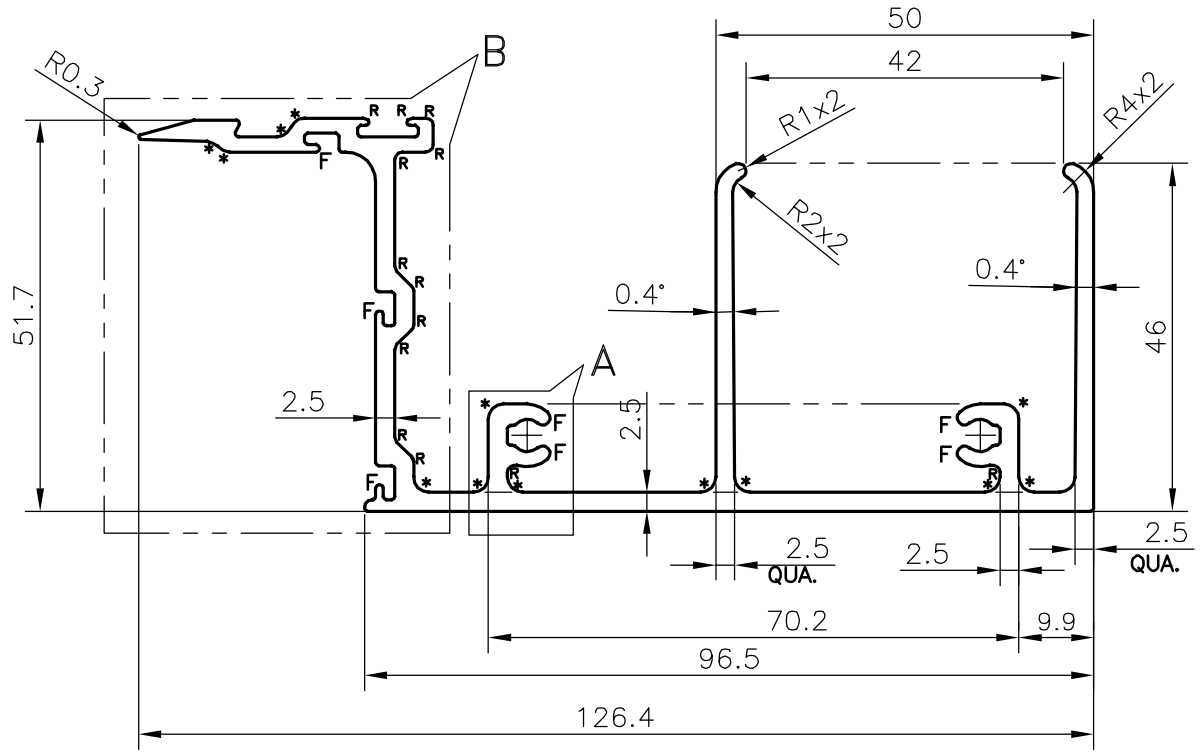

SCALE:– 1:1

F=FULL RADIUS (7 PLACES)
R = 1mm RADIUS(13 PLACES)
*= 2mm RADIUS (13 PLACES)

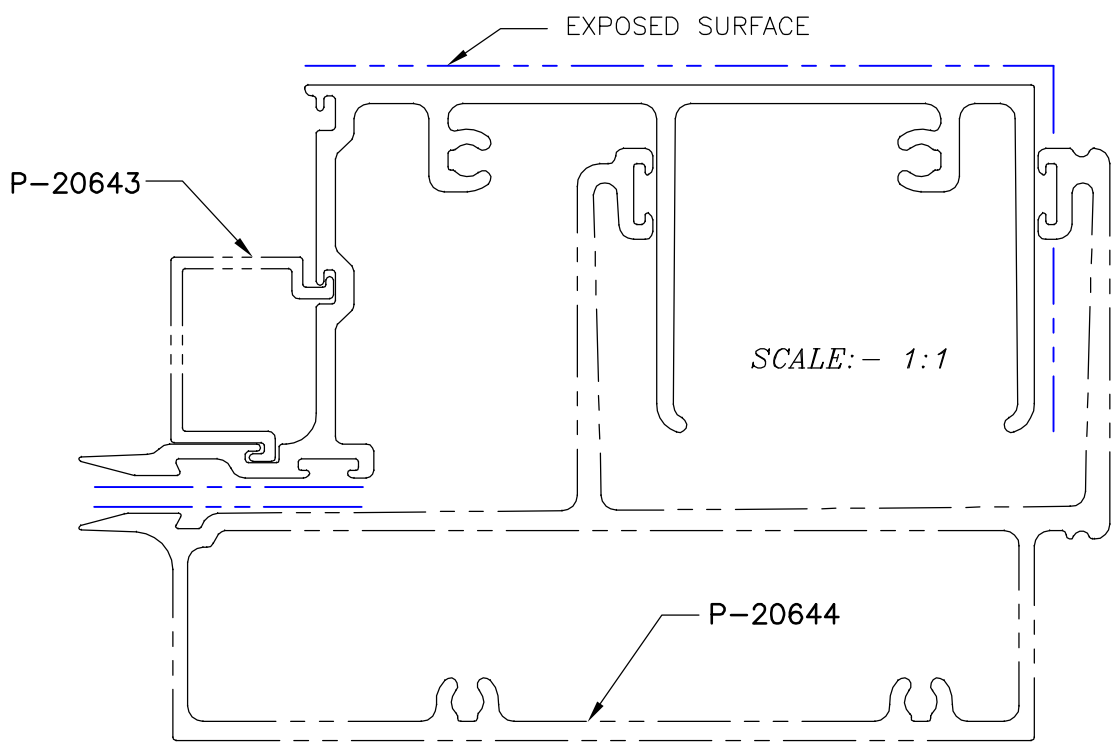

SCALE:– 1:1

TOLERANCES ON OVERALL WIDTHS & WIDTHS ACROSS FLATS OF BARS, & REGULAR SECTIONS

UPTO 6.40mm – ±0.20	UPTO 32.0mm – ±0.38	UPTO 120.0mm – ±0.85
UPTO 10.0mm – ±0.23	UPTO 50.0mm – ±0.46	UPTO 160.0mm – ±1.02
UPTO 12.0mm – ±0.25	UPTO 60.0mm – ±0.53	UPTO 200.0mm – ±1.14
UPTO 16.0mm – ±0.28	UPTO 80.0mm – ±0.69	UPTO 250.0mm – ±1.40
UPTO 25.0mm – ±0.30	UPTO 100.0mm – ±0.75	UPTO 300.0mm – ±1.65

1. STRAIGHTNESS=1.7mm/M
2. TWIST=1.7mm/M
3. ANGULARITY= ±2°
4. FLATNESS =0.007xWIDTH

JINDAL
SYMBOL OF QUALITY
AN ISO 9001 COMPANY

JINDAL ALUMINIUM LTD.
BANGALORE–560073 (INDIA)

1. ALL DIMENSIONS ARE IN mm.
2. ROUND OFF ALL SHARP CORNERS WITH 0.40 mm.
3. TOLERANCES WILL BE AS PER IS:3965–1981 , UNLESS OTHERWISE SPECIFIED

		NAME	DATE
DRAWN		DARPAN	27–01–2020
CHECKED			
APPROVED		B.NATARAJA	04–02–2020
SCALE			1:1
AREA mm^2			794.519
PERIMETER mm.			652.134
WEIGHT kg/m			2.145

PARTY'S NAME	FACADE CLAD TECH PVT. LTD., BANGALORE
PARTY'S DRAWING No.	04–10–19R1
ALLOY & TEMPER	6063 T6
DESCRIPTION	CURTAIN WALL SECTION–FEMALE TRANSOM

DRAWING No.	SECTION No.
P–20642	–
S6709	S6709