P-20519-3	
S6728	

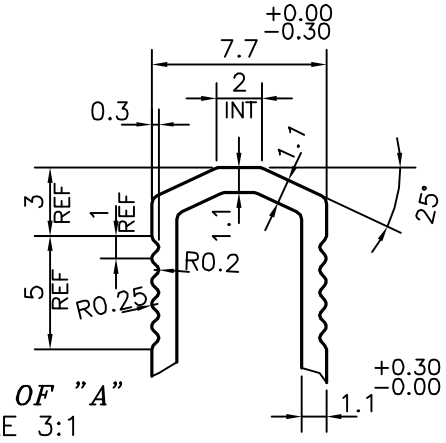

DETAIL OF "A"
SCALE 3:1

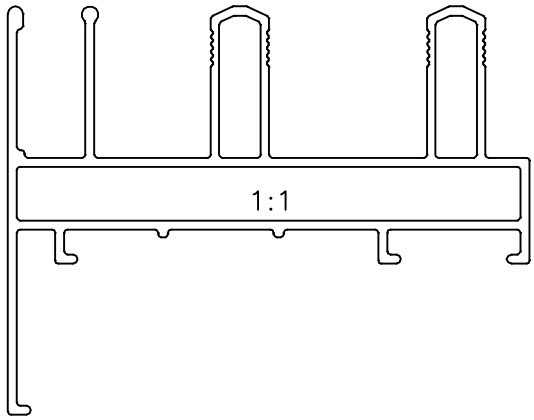

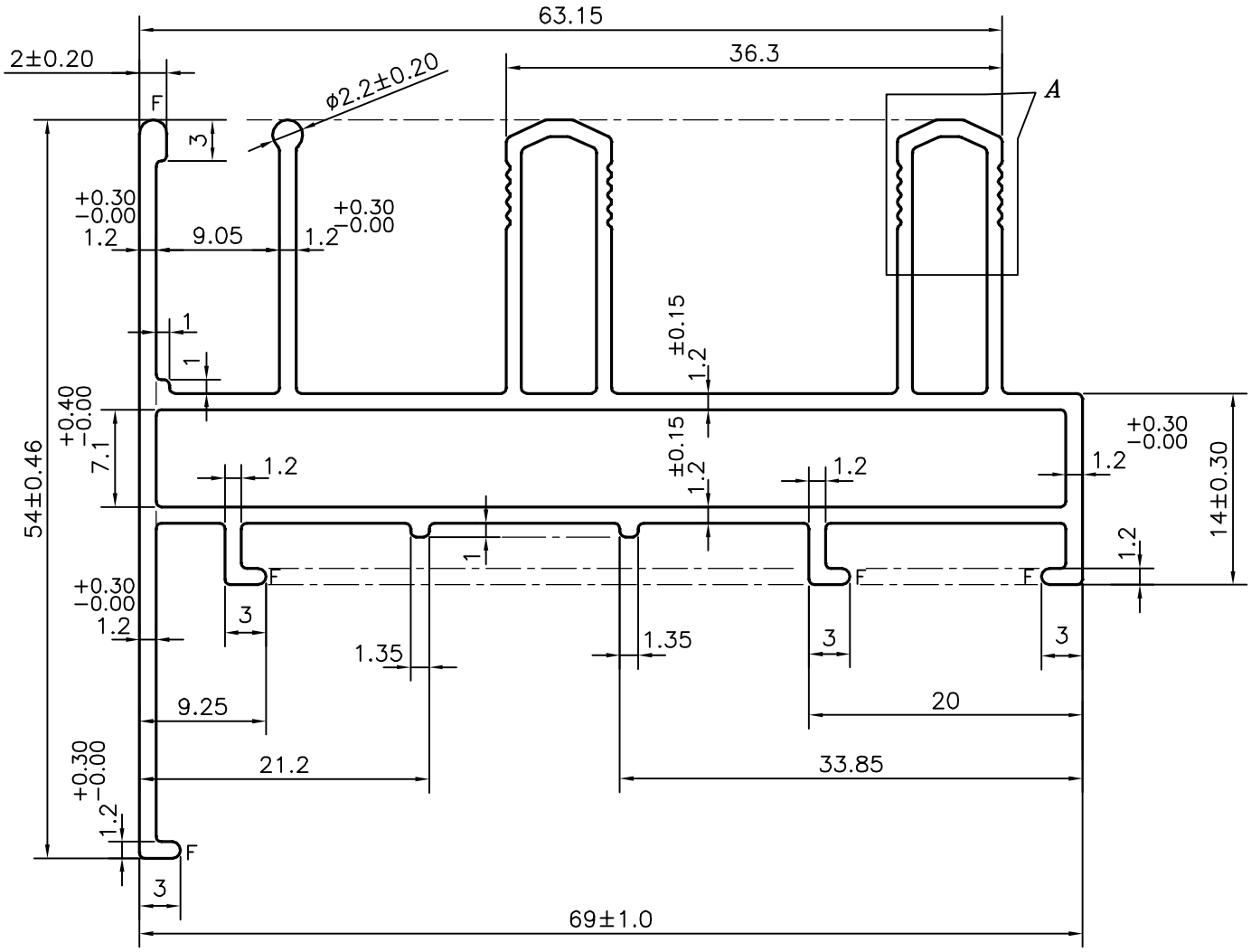

F = FULL RADIUS (3 PLACES)

			NAME	DATE
SYMBOL OF QUALITY AN ISO 9001 COMPANY	*JINDAL ALUMINIUM LTD.* *BANGALORE-560073 (INDIA)*	DRAWN	J.P.KAUSHIK	08-02-2020
		CHECKED		
		APPROVED	*B.NATARAJA*	20-02-2020

1. ALL DIMENSIONS ARE IN mm.
2. ROUND OFF ALL SHARP CORNERS WITH 0.40 mm.
3. TOLERANCES WILL BE AS PER IS:6477-1983 UNLESS OTHERWISE SPECIFIED

SCALE	2:1
AREA mm^2	386.376
PERIMETER mm.	404.259
WEIGHT kg/m	1.043

PARTY'S NAME	PARAMOUNT INDUSTRIES, BANGALORE
PARTY'S DRAWING No.	1724-42L
ALLOY & TEMPER	6063 T6
DESCRIPTION	WINDOW SECTION-3 TRACK WITH ARCHITRAY

DRAWING No.	SECTION No.
P-20519-3	-
S6728	S6728