P–20762
S6782

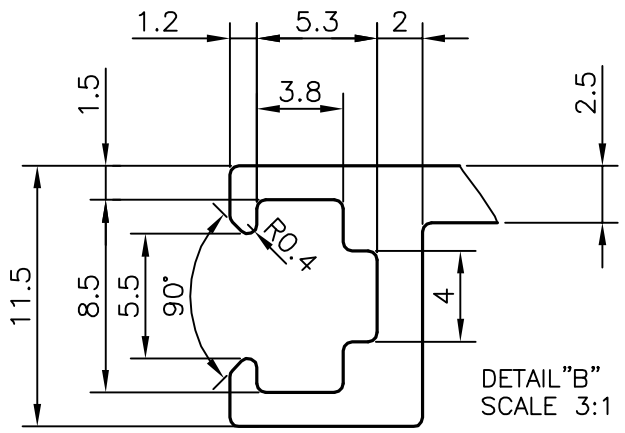

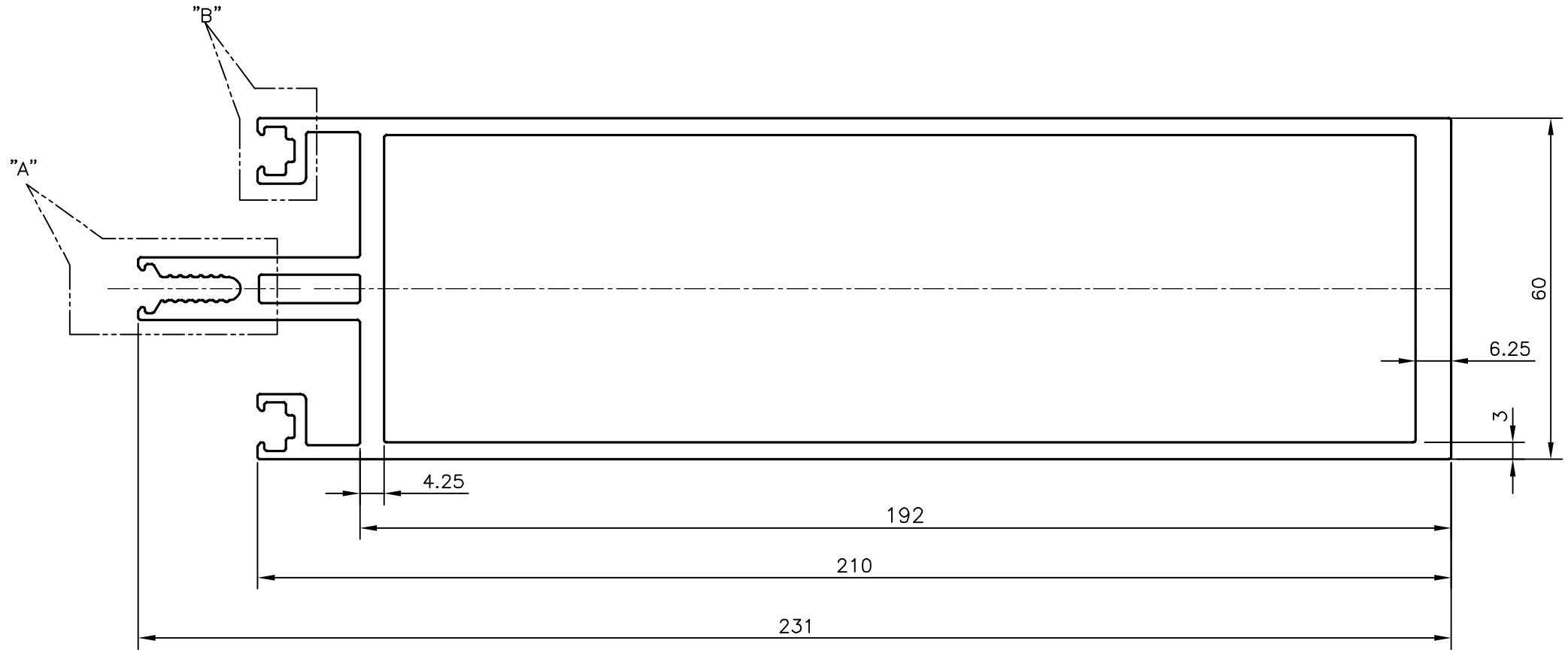

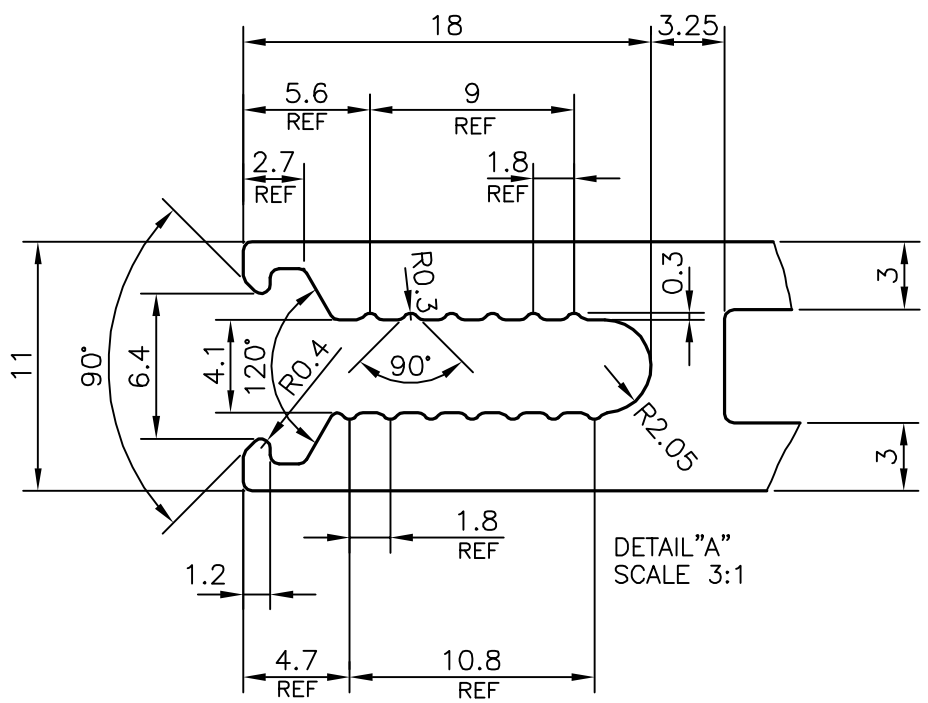

TOLERANCES ON OVERALL DIMENSIONS OF HOLLOW SECTIONS

UPTO 20.0mm – ±0.30	UPTO 80.0mm – ±0.70	UPTO 180.0mm – ±1.27
UPTO 30.0mm – ±0.38	UPTO 100.0mm – ±0.80	UPTO 200.0mm – ±1.40
UPTO 40.0mm – ±0.45	UPTO 120.0mm – ±0.90	UPTO 225.0mm – ±1.52
UPTO 50.0mm – ±0.52	UPTO 140.0mm – ±1.00	
UPTO 60.0mm – ±0.60	UPTO 160.0mm – ±1.14	

1. STRAIGHTNESS=1.7mm/M
2. TWIST=1.7mm/M
3. ANGULARITY= ±2°
4. FLATNESS =0.006xWIDTH

JINDAL
SYMBOL OF QUALITY
AN ISO 9001 COMPANY

JINDAL ALUMINIUM LTD.
BANGALORE–560073 (INDIA)

1. ALL DIMENSIONS ARE IN mm.
2. ROUND OFF ALL SHARP CORNERS WITH 0.40 mm.
3. TOLERANCES WILL BE AS PER IS:6477–1983 UNLESS OTHERWISE SPECIFIED

		NAME	DATE
DRAWN		J.P.KAUSHIK	17–02–2020
CHECKED			
APPROVED		B.NATARAJA	14–03–2020
SCALE			1:1
AREA mm^2			2124.511
PERIMETER mm.			757.216
WEIGHT kg/m			5.736
PARTY'S NAME	GLAZIUM FACADES PVT. LTD., PUNE	DRAWING No.	SECTION No.
PARTY'S DRAWING No.	AS PER DRAWING	P–20762	–
ALLOY & TEMPER	6063 T6	S6782	S6782
DESCRIPTION	CUTTAIN WALL SECTION–MULLION		