P–20872
S6803

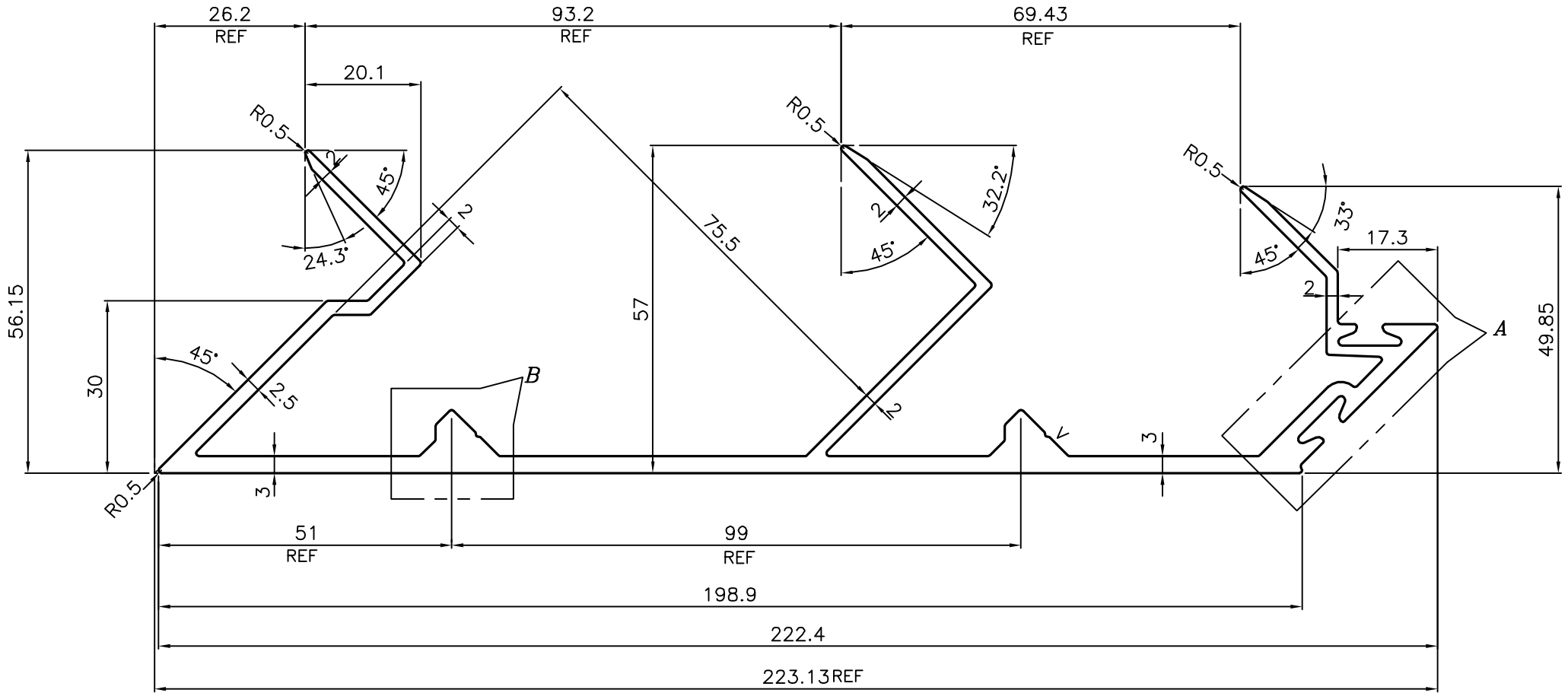

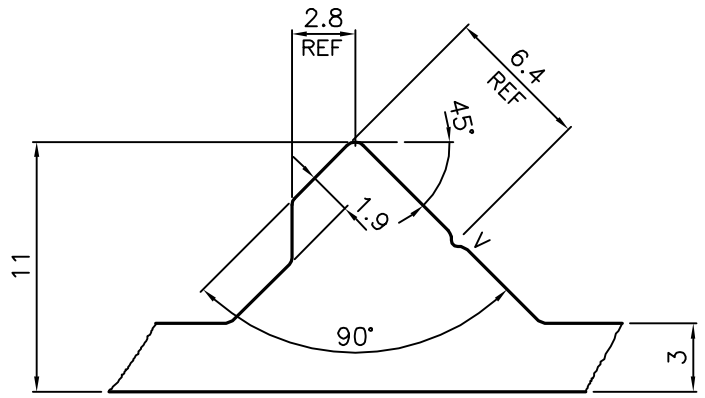

DETAIL OF "B"
SCALE 3:1

V = V GROOVE 0.3x90° (2 PLACES)

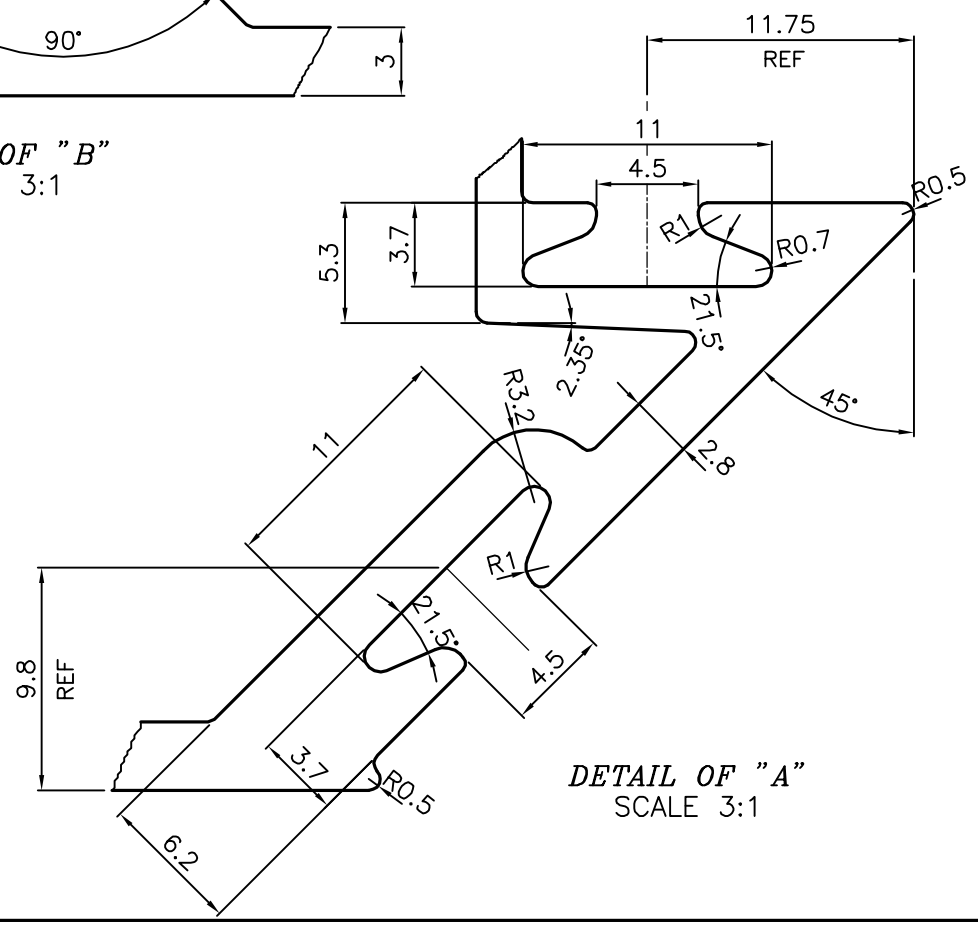

DETAIL OF "A"
SCALE 3:1

TOLERANCES ON OVERALL WIDTHS & WIDTHS ACROSS FLATS OF BARS, & REGULAR SECTIONS			
UPTO 6.40mm – ±0.20 UPTO 10.0mm – ±0.23 UPTO 12.0mm – ±0.25 UPTO 16.0mm – ±0.28 UPTO 25.0mm – ±0.30	UPTO 32.0mm – ±0.38 UPTO 50.0mm – ±0.46 UPTO 60.0mm – ±0.53 UPTO 80.0mm – ±0.69 UPTO 100.0mm – ±0.75	UPTO 120.0mm – ±0.85 UPTO 160.0mm – ±1.02 UPTO 200.0mm – ±1.14 UPTO 250.0mm – ±1.40 UPTO 300.0mm – ±1.65	1. STRAIGHTNESS=1.7mm/M 2. TWIST=1.7mm/M 3. ANGULARITY= ±2° 4. FLATNESS =0.007xWIDTH

JINDAL
SYMBOL OF QUALITY
AN ISO 9001 COMPANY

JINDAL ALUMINIUM LTD.
BANGALORE–560073 (INDIA)

	NAME	DATE
DRAWN	J.P.KAUSHIK	11–03–2020
CHECKED		
APPROVED	J.N.RAI	24–03–2020

1. ALL DIMENSIONS ARE IN mm.
2. ROUND OFF ALL SHARP CORNERS WITH 0.40 mm.
3. TOLERANCES WILL BE AS PER IS:3965–1981 , UNLESS OTHERWISE SPECIFIED

SCALE	1:1
AREA mm^2	1266.138
PERIMETER mm.	907.511
WEIGHT kg/m	3.419

PARTY'S NAME	HARDWARE SYNDICATE, BANGALORE
PARTY'S DRAWING No.	AS PER DRAWING
ALLOY & TEMPER	6063 T6
DESCRIPTION	CURTAIN WALL SECTION–CORNER MALE MULLION

DRAWING No.	SECTION No.
P–20872	–
S6803	S6803