— UNLESS OTHERWISE NOTED ALL DIMENSIONS WILL BE IN ACCORDANCE WITH I.S.I. STANDARD COMMERCIAL TOLERANCES.
— CUSTOMER APPROVAL OF DIMENSIONS AND TOLERANCES. CONSTITUTE ACCEPTANCE OF MATERIAL AS PER THIS PRINT.

CUSTOMERS APPROVAL (SEAL & SIGNATURE)

— TYP WALL THICKNESS UNLESS OTHERWISE INDICATED.
0.3 — RADIUS TYP ALL CORNERS & FILLETS UNLESS OTHERWISE INDICATED

TOL. AS PER BS 1474:1972

.ASSIC HINGE

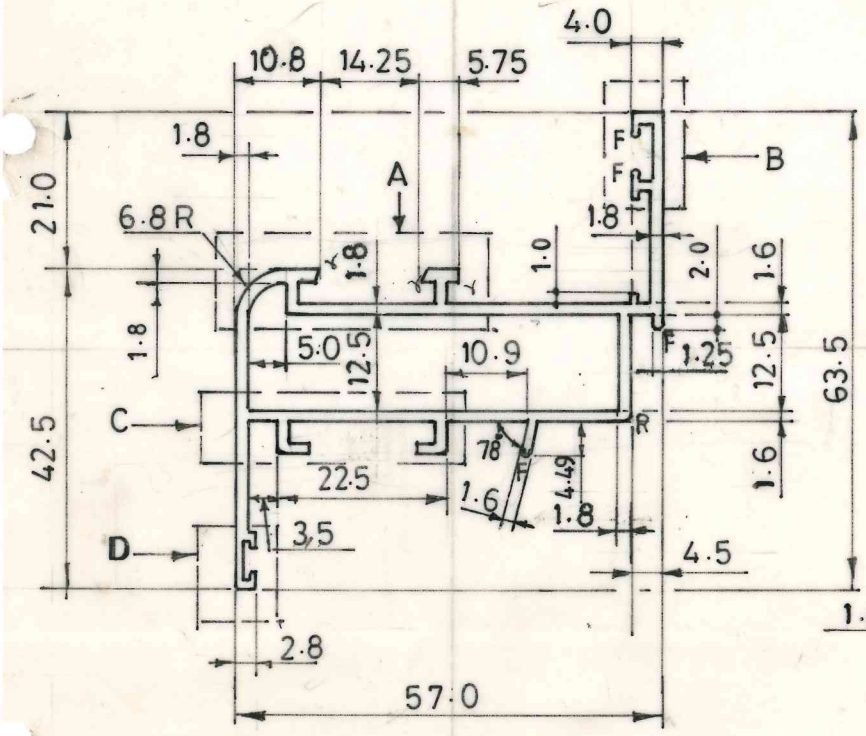

DETAIL-D

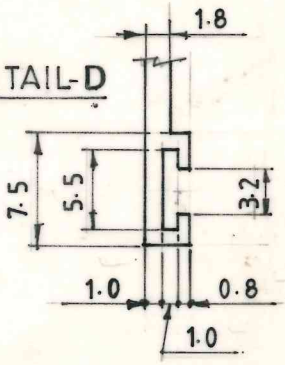

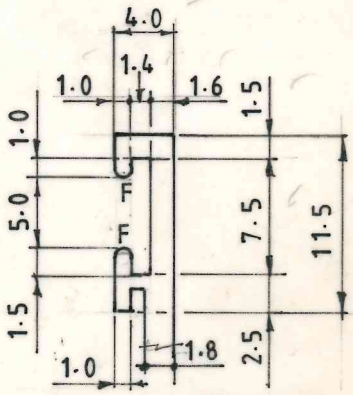

DETAIL-B

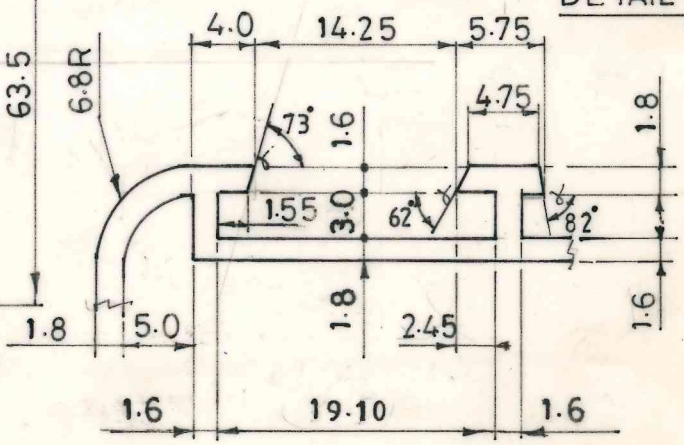

DETAIL-A

F- FULL RADIUS
R - 1.0R
γ - 0.2R

WT/M-0.995KG

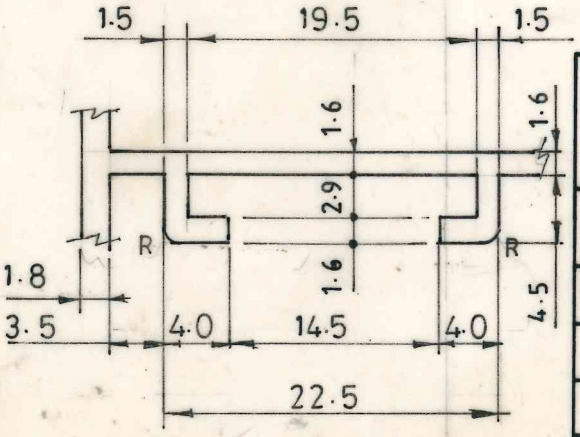

DETAIL-C

REVISIONS

MAL EXTRUSION
MAHAVIR ALUMINIUM LTD. BHIWADI

CUST. M/S. WINDOWCRAFT	
CUST. PART No.	CUST. DRG. No. 1302
SCALE 1:1 & 2:1	DATE 1.9.95
ALLOY & TEMPER 6063T5	SEC. NO WCH-1302
DRAWN BY S.K. Sharma	
CHECKED BY 3/9/95	REF MKT/MCA/95-96/1343/29 8/95