| |
|---|
| 8863 |
| 20771 |
| X1105 |

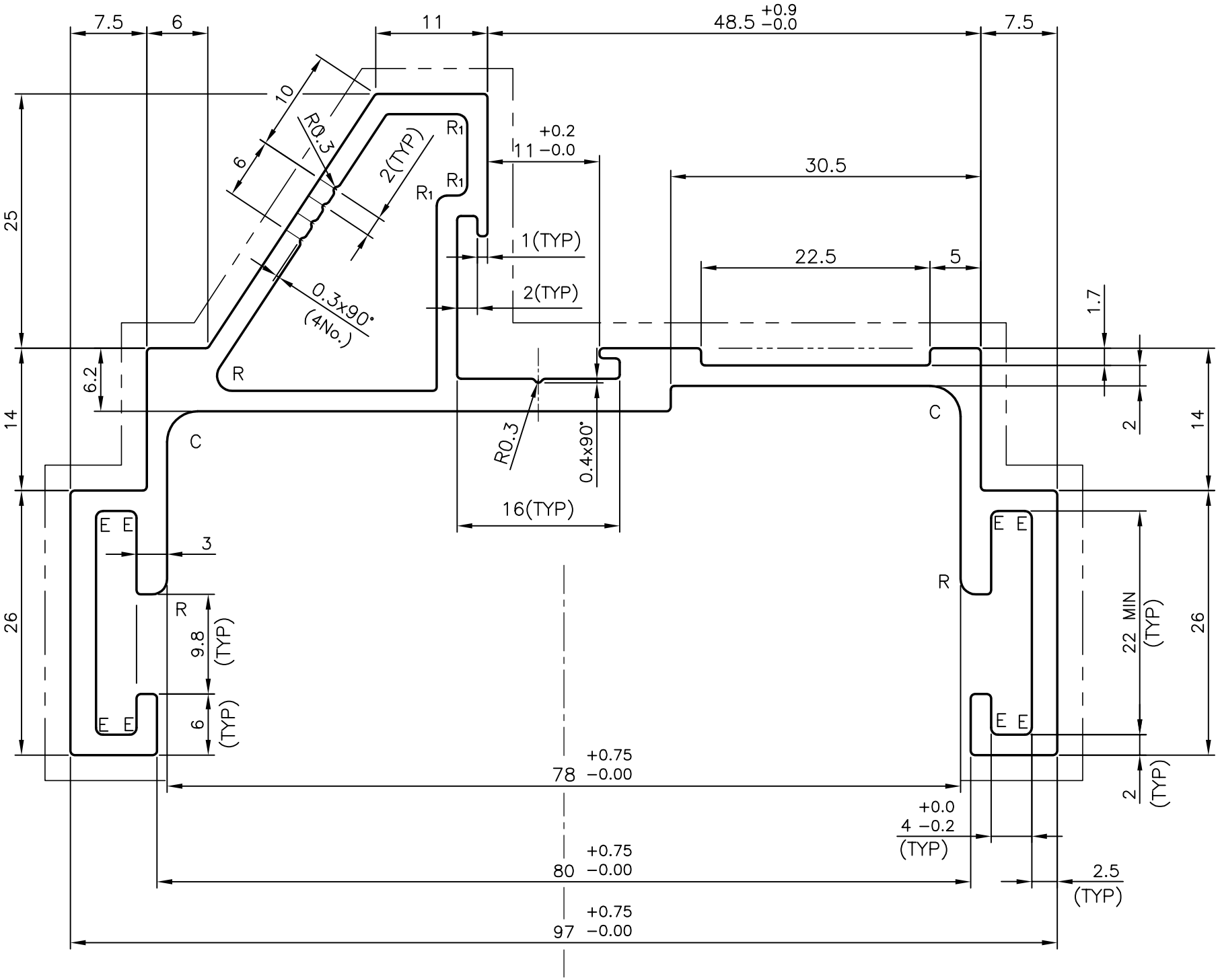


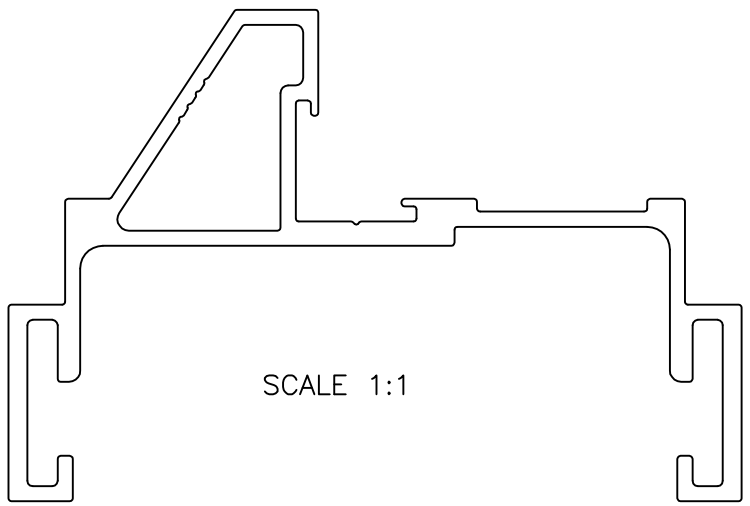


E = R0.7 mm (8 PLACES)
R = R1.5 mm (3 PLACES)
C = R3.0 mm (2 PLACES)
R1 = R1.0 mm (3 PLACES)
UNSPECIFIED WALL THICKNESS = 2.0 mm
—— – – —— EXPOSED SURFACE

JINDAL
SYMBOL OF QUALITY
AN ISO 9001 COMPANY

**JINDAL ALUMINIUM LTD.**
*BANGALORE–560073 (INDIA)*

1. ALL DIMENSIONS ARE IN mm.
2. ROUND OFF ALL SHARP CORNERS WITH 0.40 mm.
3. TOLERANCES WILL BE AS PER BS:EN–755 UNLESS OTHERWISE SPECIFIED

| | |
|---|---|
| PARTY'S NAME | KOMFORT SYSTEMS LTD., U.K. |
| PARTY'S DRAWING No. | D4/816 K/0000 (ISSUE 05) |
| ALLOY & TEMPER | HE9 WP (6063 TF) |
| DESCRIPTION | 75 mm DOOR FRAME |

| | NAME | DATE |
|---|---|---|
| DRAWN | PRASANNA.H | 11–06–2008 |
| CHECKED | | |
| APPROVED | | |
| SCALE | | 2:1 |
| AREA $mm^2$ | | 677.886 |
| PERIMETER mm. | | 469.694 |
| WEIGHT kg/m | | 1.832 |

| DRAWING No. | SECTION No. |
|---|---|
| 8863 | 8863 |
| 20771 | 20771 |
| X1105 | X1105 |