P-4195-2
9402
20997-ISSUE-2
X1108

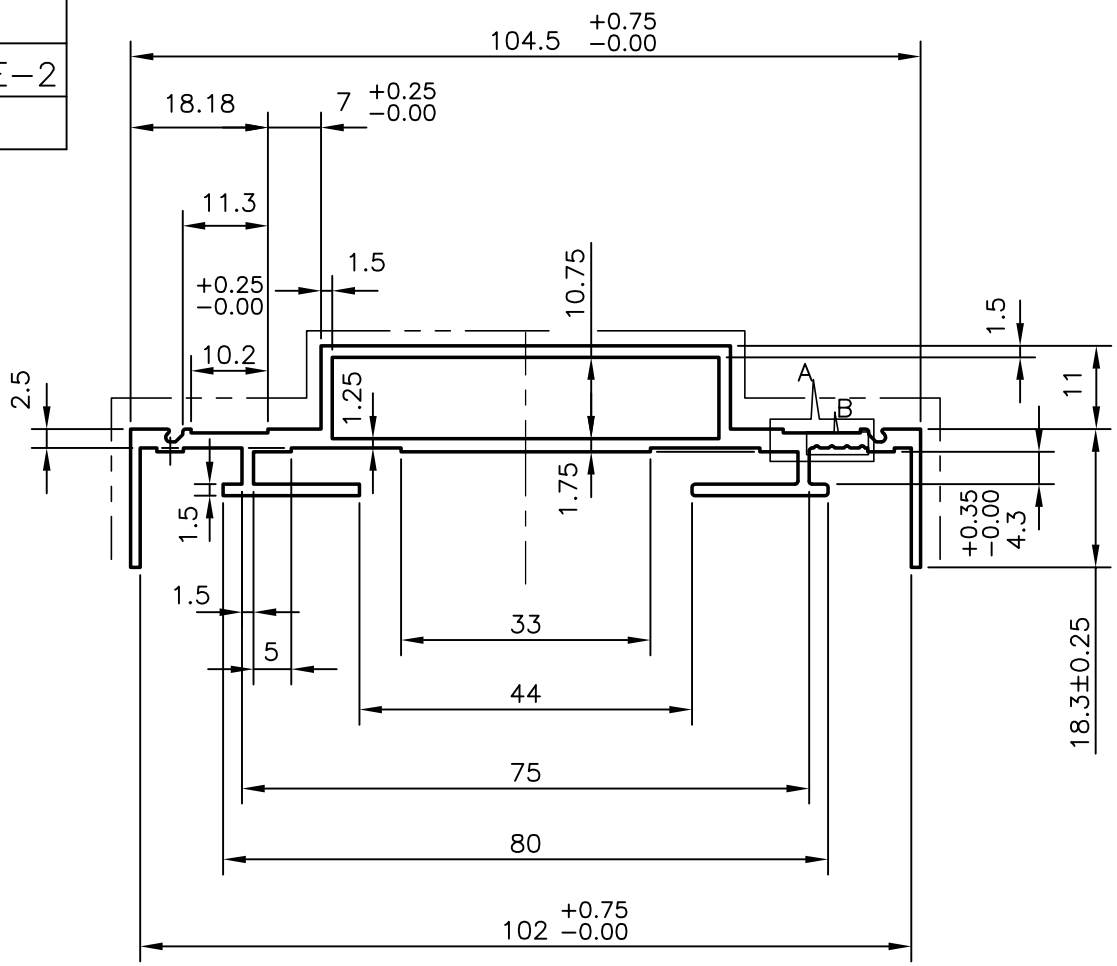

ISSUE-2 IDENTIFICATION GROOVES ADDED AS PER PARTY'S REQUIREMENT

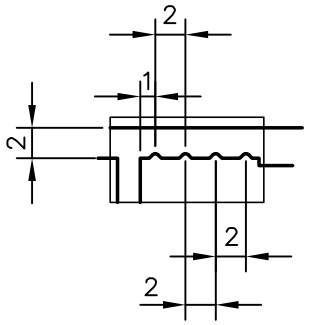

DETAIL OF "B"
SCALE 2:1

DETAIL OF "A"
SCALE 2:1

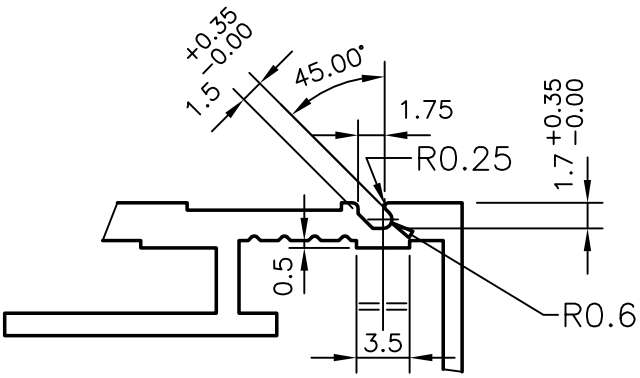

V = 0.30x90° GROOVE (4)

			NAME	DATE
JINDAL SYMBOL OF QUALITY AN ISO 9001 COMPANY	*JINDAL ALUMINIUM LTD.* *BANGALORE-560073 (INDIA)*	DRAWN	ABHARANI	27-10-2008
		CHECKED		
		APPROVED		

1. ALL DIMENSIONS ARE IN mm.
2. ROUND OFF ALL SHARP CORNERS WITH 0.4 mm.
3. TOLERANCES WILL BE AS PERBS:EN-755 UNLESS OTHERWISE SPECIFIED

SCALE	1:1
AREA mm^2	423.083
PERIMETER mm.	401.026
WEIGHT kg/m	1.142

PARTY'S NAME	KOMFORT OFFICE ENVIRONMENTS PLC., U.K.
PARTY'S DRAWING No.	D3/824D/0000 (ISSUE-1)
ALLOY & TEMPER	6063 TF
DESCRIPTION	GLAZING LINER DOUBLE GLAZED

DRAWING No.	SECTION No.
P-4195-2	
9402	9402
20997-ISSUE-2	20997-ISSUE-2
X1108	X1108